MASON COUNTY PUD NO. 1

MASON COUNTY WASHINGTON

MANZANITA RESERVOIR AND BOOSTER PUMP STATION

THIS PROJECT IS FUNDED IN PART BY PUBLIC WORKS TRUST FUND (PWTF)

PUD OFFICIALS

MIKE SHEETZ
DISTRICT 1 COMMISSIONER

RON GOLD
DISTRICT 2 COMMISSIONER

JACK JANDA
DISTRICT 3 COMMISSIONER

KRISTIN MASTELLER
GENERAL MANAGER

Gray & Osborne, Inc.
CONSULTING ENGINEERS
2102 CARRIAGE DRIVE SW, BUILDING I
OLYMPIA, WA 98502 (360) 292-7481

APRIL 2025
G&O #22260.00

SHEET INDEX

SHEET NO	DESCRIPTION	SCHEDULE
--	COVER SHEET	A, B
GENERAL		
G-1	SHEET INDEX, VICINITY AND LOCATION MAPS	A, B
G-2	ABBREVIATIONS, LINETYPES, SYMBOLS, AND GENERAL NOTES	A, B
G-3	PROCESS FLOW DIAGRAM	A, B
G-4	SURVEY CONTROL - MTN 2 COAST LLC	A
G-5	SURVEY CONTROL - MTN 2 COAST LLC	A
G-6	SURVEY CONTROL AND ALIGNMENT TABLES	B
G-7	OVERALL EXISTING PROJECT MAP	A
G-8	OVERALL EXISTING PROJECT MAP	B
CIVIL		
C1-1	HIGHLAND PARK EXISTING SITE AND DEMOLITION SITE PLAN	A, B
C1-2	HIGHLAND PARK SALVAGE AND DEMOLITION PLAN	A, B
C1-3	HIGHLAND PARK PIPING PLAN	A, B
C2-1	MANZANITA EXISTING SITE AND DEMOLITION PLAN	A, B
C2-2	PROPOSED OVERALL PLAN	A, B
C2-3	RESERVOIR AND BOOSTER STATION PIPING PLAN	A, B
C2-4	PROPOSED WATER MAIN PLAN	A, B
C2-5	PROPOSED STORMWATER POND GRADING AND PIPING PLAN	A, B
C2-6	PROPOSED STORMWATER POND GRADING AND PIPING SECTIONS	A, B
C2-7	RESERVOIR AND BOOSTER STATION GRADING PLAN	A, B
C2-8	RESERVOIR AND BOOSTER PUMP PROPOSED GRADING SECTIONS	A, B
C4-1	ALDERBROOK SYSTEM WATER MAIN PLAN STA 10+00 TO 18+00	B
C4-2	ALDERBROOK SYSTEM WATER MAIN PLAN STA 18+00 TO 26+00	B
C4-3	ALDERBROOK SYSTEM WATER MAIN PLAN STA 26+00 TO 34+00	B
C4-4	ALDERBROOK SYSTEM WATER MAIN PLAN STA 34+00 TO 39+00	B
CD-1	TESC NOTES	A, B
CD-2	TESC DETAILS	A, B
CD-3	TRENCH AND RESTORATION DETAILS	A, B
CD-4	WATER DETAILS	A, B
CD-5	DRAINAGE AND MISCELLANEOUS DETAILS	B
CD-6	STORMWATER DETAILS	B
CD-7	FENCE AND GENERATOR PAD DETAILS	B

SHEET INDEX

SHEET NO	DESCRIPTION	SCHEDULE
MECHANICAL		
M-1	PIPE SYMBOLS, GENERAL SYMBOLS, AREA AND EQUIPEMENT IDENTIFICATIONS	A
M-2	DETAILS	A
M2-1	RESERVOIR 1 AND 2 FLOOR PLAN	A
M2-2	RESERVOIR ROOF PLAN, ELEVATION AND DETAIL	A
M2-3	RESERVOIR DETAILS	A
M2-4	RESERVOIR DETAILS	A
M2-5	RESERVOIR DETAILS	A
M2-6	RESERVOIR DETAILS	A
M3-1	BOOSTER PUMP STATION BUILDING PLAN	A
STRUCTURAL		
S-1	GENERAL STRUCTURAL NOTES AND TYPICAL DETAILS	A
S-2	TYPICAL STRUCTURAL DETAILS	A
S-3	TYPICAL STRUCTURAL DETAILS	A
S3-1	BOOSTER STATION FOUNDATION, FLOOR AND ROOF FRAMING PLAN	A
S3-2	BOOSTER STATION ELEVATIONS AND CROSS SECTION	A
S3-3	STRUCTURAL SECTIONS	A
HVAC		
H3-1	HVAC DESIGN CRITERIA, ABBREV SYMBOLS, EQUIP IDENT & NOTES	A
H3-2	HVAC FLOOR PLAN	A
ELECTRICAL		
E-1	ELECTRICAL SYMBOLS ABBREVIATIONS AND GENERAL NOTES	A
E-2	DEVICE TAG LIST, WORK SUMMARY	A
E-3	MODIFIED ELECTRICAL SITE PLAN	A
E-4	MODIFIED ELECTRICAL SITE PLAN	A
E-5	RESERVOIR 1 AND 2 ELECTRICAL PLAN	A
E-6	ONE-LINE DIAGRAM	A
E-7	GROUNDING ONE-LINE DIAGRAM	A
E-8	POWER CONTROL AND INSTRUMENTATION PLAN	A
E-9	LIGHTING AND RECEPTACLE PLAN	A
E-10	HVAC PLAN	A
E-11	[03 PB 01] 480V 3 PHASE PANELBOARD	A
E-12	[03 PB 02] 240V 1 PHASE PANELBOARD	A

SHEET INDEX

SHEET NO	DESCRIPTION	SCHEDULE
E-13	SITE CONTROL PANEL [03 CP 01] ELEVATIONS	A
E-14	CONTROL PANEL [03 CP 01] ELEMENTARY WIRING DIAGRAM	A
E-15	CONTROL PANEL [03 CP 01] ELEMENTARY WIRING DIAGRAM (CONT.)	A
E-16	ANALOG LOOP DIAGRAMS	A
E-17	AUTODIALER I-O AND ALARMING	A
E-18	PLC EXTENDED I-O	A
EC-1	CABLE AND CONDUIT SCHEDULE	A
ED-1	SITEWORK DETAILS	A
ED-2	INTRUSION SWITCH DETAILS	A

AREA NUMBER

1 HIGHLAND PARK (SCHEDULE A)

2 MANZANITA RESERVOIRS (SCHEDULE A)

3 MANZANITA BOOSTER PUMP STATION BUILDING (SCHEDULE A)

4 ALDERBROOK SYSTEM (SCHEDULE B)

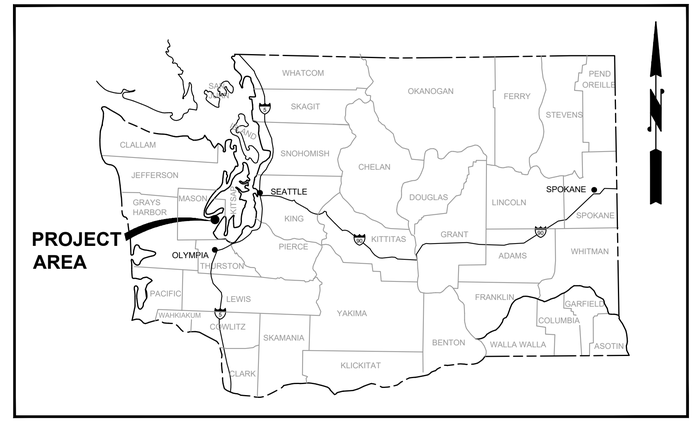

VICINITY MAP

NTS

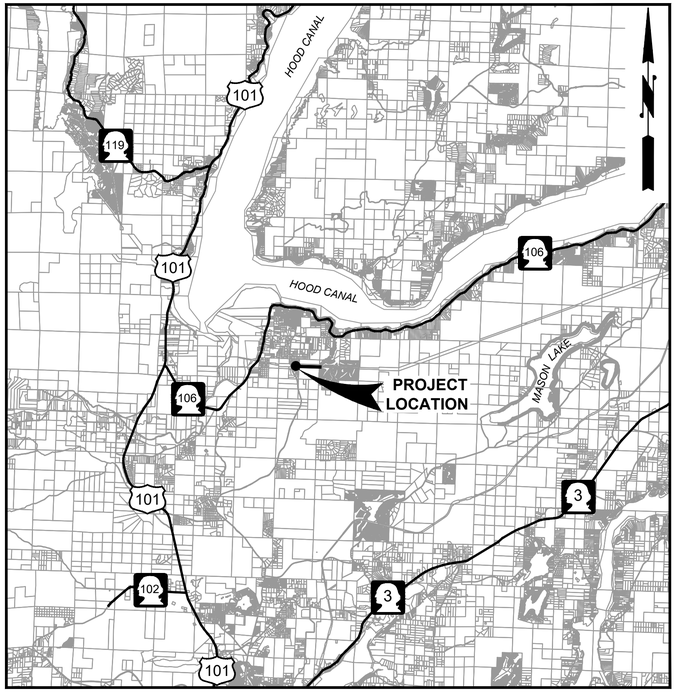

LOCATION MAP

SCALE: 1" = 10,000'

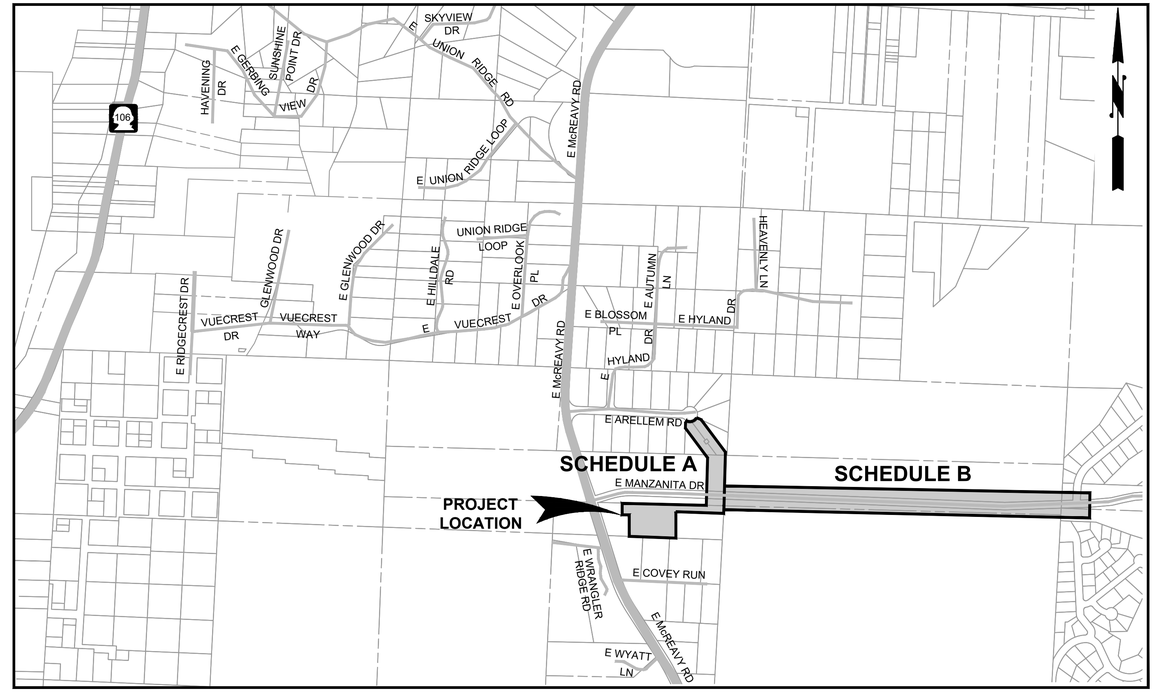

AREA MAP

SCALE: 1" = 600'

Gray & Osborne, Inc.
CONSULTING ENGINEERS
2102 CARRIAGE DRIVE SW, BUILDING I
OLYMPIA, WA 98502
(360) 292-7481

MICHAEL B. JOHNSON — STATE OF WASHINGTON — 36498 — REGISTERED PROFESSIONAL ENGINEER

4/7/25

MASON COUNTY PUD

MASON COUNTY PUD NO. 1
MANZANITA RESERVOIR AND BOOSTER PUMP STATION
1681 E McREAVY RD
UNION, WA

No.	DATE	REVISION

ISSUED FOR:	BID SET
ISSUE DATE:	APRIL 2025
APPROVED BY:	MBJ
CHECKED BY:	SLG
DRAWN BY:	JPW
DESIGNER:	SLG
G & O JOB NO.:	22260.00
FILE:	VIC_MAP.DWG

0 1" 2"
TWO INCHES AT FULL SCALE.
IF NOT, SCALE ACCORDINGLY

GENERAL

SCHEDULE A, B
SHEET INDEX, VICINITY AND LOCATION MAPS

DRAWING: **G-1** OF: **8**

ABBREVIATIONS

AC	ASBESTOS CEMENT PIPE
ADJ	ADJUST
ALT	ALTERNATE
ALUM	ALUMINUM
ANSI	AMERICAN NATIONAL STANDARDS INSTITUTE
AP	ANGLE POINT
ASPH	ASPHALT
ASSY	ASSEMBLY
ASTM	AMERICAN SOCIETY OF TESTING AND MATERIALS
AVE	AVENUE
BF	BLIND FLANGE
BLDG	BUILDING
BLK	BLOCK
BO	BLOW OFF
BOP	BEGINNING OF PROJECT
BVCE	BEGIN VERTICAL CURVE ELEVATION
BVCS	BEGIN VERTICAL CURVE STATION
C	CONDUIT
CAP	CORRUGATED ALUMINUM PIPE
CB	CATCH BASIN
CF	CUBIC FEET
CFS	CUBIC FEET PER SECOND
CICL	CAST IRON CLASS
CLR	CLEARANCE
CMP	CORRUGATED METAL PIPE
CO	CLEANOUT
CONC	CONCRETE
CONN	CONNECTION
CONT	CONTINUED/CONTINUOUS
CPEP	CORRUGATED POLYETHYLENE PIPE
CPLG	COUPLING
CTR	CENTER
CY	CUBIC YARD
℄	CENTER LINE
D	DRAIN
DC	DEGREE OF CURVATURE
DI	DUCTILE IRON
DIA	DIAMETER
DIM	DIMENSION
DOT	DEPARTMENT OF TRANSPORTATION
DWGS	DRAWING(S)
E	EAST
EA	EACH
EL	ELEVATION
ELEC	ELECTRICAL
EOA	EDGE OF ASPHALT
EOP	END OF PROJECT
EVCE	END VERTICAL CURVE ELEVATION
EVCS	END VERTICAL CURVE STATION
EXIST	EXISTING
FIG	FIGURE
FIN	FINISHED
FL	FLANGE
FT	FEET
GA	GAUGE
GALV	GALVANIZED
GI	GALVANIZED IRON
GV	GATE VALVE
HDPE	HIGH DENSITY POLYETHYLENE PIPE
ID	INSIDE DIAMETER
IE	INVERT ELEVATION
IN	INCH
INV	INVERT
L	LENGTH
LB	POUND
LF	LINEAR FEET
MAX	MAXIMUM
MFR	MANUFACTURER
MH	MANHOLE
MIN	MINIMUM
MISC	MISCELLANEOUS
MJ	MECHANICAL JOINT
N	NORTH
NO	NUMBER
NTS	NOT TO SCALE
OC	ON CENTER
OD	OUTSIDE DIAMETER
PC	POINT OF CURVATURE
PE	PLAIN END
PERF	PERFORATED
PI	POINT OF INTERSECTION
PP	POWER POLE
PT	POINT OF TANGENCY
PVC	POLYVINYL CHLORIDE
PVI	POINT OF VERTICAL INTERSECTION
PVMT	PAVEMENT
PVT	POINT OF VERTICAL TANGENT
QTY	QUANTITY
R	RADIUS
R/W	RIGHT-OF-WAY
RED	REDUCER
REINF	REINFORCE
REQD	REQUIRED
RET	RETAINING
RR	RAILROAD
S	SOUTH
SCH	SCHEDULE
SF	SQUARE FEET
SHT	SHEET
SL	SLOPE
SPECS	SPECIFICATIONS
SQ	SQUARE
STA	STATION
STD	STANDARD
TB	THRUST BLOCK
TC	TOP OF CURB
TEL	TELEPHONE
TESC	TEMPORARY EROSION AND SEDIMENT CONTROL
THRD	THREADED
THRU	THROUGH
TYP	TYPICAL
VERT	VERTICAL
W	WEST
W/	WITH
W/O	WITHOUT
WSDOT	WASHINGTON STATE DEPARTMENT OF TRANSPORTATION

LINETYPES

EXISTING	PROPOSED	DESCRIPTION
SURFACE FEATURES		
		ASPHALT PAVEMENT
		GRAVEL SURFACING
x x	x x	FENCE/RAILING (TYPE AS NOTED)
x x	x x	FENCE WITH GATE
		SHRUB/TREE/VEGETATION LINE
		EDGE OF LANDSCAPING
	* *	SILT FENCE
		CLEARING LIMITS
SURVEY		
		RIGHT-OF-WAY LINE
		CENTERLINE OF RIGHT-OF-WAY
		PROPERTY LINE
		PERMANENT EASEMENT LINE
10	10	CONTOUR LINE
UTILITIES		
E	E	BURIED ELECTRICAL
OP OP		OVERHEAD POWER
P		POWER
T		BURIED TELEPHONE/COMMUNICATIONS
W	W	WATER MAIN (SIZE AS NOTED)
	LP	LIQUID PROPANE (SIZE AS NOTED)
D	D	STORM DRAIN (SIZE AS NOTED)
D	D	CULVERT (SIZE & TYPE AS NOTED)
		DITCH CENTERLINE/THALWEG

WATER SYMBOLS

EXISTING	PROPOSED	DESCRIPTION
		CAP/PLUG
		COUPLING/ADAPTER
		REDUCER
		THRUST BLOCK
		WATER METER
		DRAFT HYDRANT
		SAMPLE STATION
	JOINTS	
		FLANGE/BLIND FLANGE
		MECHANICAL JOINT
	VALVES	
		AIR RELIEF VALVE
		BLOW-OFF VALVE
		GATE VALVE
		INLINE CHECK VALVE
		FLEXIBLE EXPANSION JOINT

POWER/TELEPHONE SYMBOLS

EXISTING	PROPOSED	DESCRIPTION
		UTILITY POLE
		UTILITY POLE ANCHOR
		UTILITY PEDESTAL

SURVEY SYMBOLS

EXISTING	PROPOSED	DESCRIPTION
		HUB AND TACK
		REBAR AND CONTROL CAP

SANITARY/STORM SEWER SYMBOLS

EXISTING	PROPOSED	DESCRIPTION
	D	STORM DRAIN MANHOLE/TYPE 2 CATCH BASIN (ACTUAL DIMENSION SHOWN FOR PROPOSED)
		STORM DRAIN CATCH BASIN, CONCRETE INLET, OR YARD/AREA DRAIN (ACTUAL DIMENSION SHOWN FOR PROPOSED)
		CLEAN OUT

SURFACE FEATURES/LANDSCAPING

EXISTING	PROPOSED	DESCRIPTION
		BUILDING
		MAIL BOX (NOTED)
		SIGN
		TREE STUMP
		TREE (CONIFER)
		TREE (DECIDUOUS)

GENERAL NOTES:

1. ALL MATERIALS AND WORKMANSHIP SHALL BE FURNISHED AND SUPPLIED IN ACCORDANCE WITH THE 2022 EDITION OF THE WASHINGTON STATE DEPARTMENT OF TRANSPORTATION STANDARD SPECIFICATIONS FOR ROAD, BRIDGE AND MUNICIPAL CONSTRUCTION, UNLESS OTHERWISE SPECIFICALLY NOTED.
2. THE CONTRACTOR SHALL BE RESPONSIBLE TO CONTACT AND COORDINATE WITH ALL UTILITY COMPANIES IN ORDER TO ASSURE THAT ALL LINES, PIPES, POLES AND OTHER APPURTENANCES ARE PROPERLY LOCATED, SECURED, AND/OR PROTECTED. BURIED UTILITIES (WHERE KNOWN) ARE SHOWN IN THEIR APPROXIMATE LOCATION. THE CONTRACTOR SHALL HAVE UTILITIES VERIFIED ON THE GROUND PRIOR TO ANY CONSTRUCTION. NOTIFY THE UNDERGROUND UTILITIES LOCATE CENTER: 1-800-424-5555.
3. ON-SITE EROSION AND SEDIMENT CONTROL MEASURES ARE REQUIRED AND SHALL BE THE RESPONSIBILITY OF THE CONTRACTOR.
4. THE CONTRACTOR SHALL HAVE A COPY OF THESE PLANS, ANY ADDENDA, CHANGE ORDERS, AND THE CONTRACT SPECIFICATIONS ON THE JOB SITE WHENEVER CONSTRUCTION IS IN PROGRESS.
5. THE CONTRACTOR SHALL MAINTAIN A CLEAN LEGIBLE SET OF RECORD DRAWINGS AND PROVIDE A SET TO THE OWNER PRIOR TO DEMOBILIZATION OF THE SITE. SEE SPECIFICATIONS.

EXAMPLE OF SECTION NUMBERING SYSTEM AND PLAN/DRAWING TITLES

FOR DETAILS SUBSTITUTE DETAIL NUMBER FOR SECTION LETTER

ELEVATION VIEW ON SHT. M-1 — A / M-1

SECTION CUT ON SHT. M-1 — A / M-1
- SECTION LETTER OR DETAIL NUMBER
- SHT. ON WHICH SECTION OR DETAIL APPEARS

ON SHT. M99-9 THIS SECTION IS IDENTIFIED AS:

SECTION — A / M-1
SCALE: ?"=1'-0"
- SECTION LETTER OR DETAIL NUMBER
- SHT. FROM WHICH SECTION OR DETAIL WAS TAKEN

A / -
- SECTION LETTER OR DETAIL NUMBER
- SECTION APPEARS ON SAME DWG AS CUT

A / TYP
- SECTION LETTER OR DETAIL NUMBER
- SECTION IS TYPICAL TO MANY PLACES

DETAILS ARE REFERENCED IN A SIMILAR MANNER EXCEPT NUMBERS ARE USED INSTEAD OF LETTERS

DRAWING TITLE IDENTIFICATION : **DRAWING TITLE**
SCALE: ?"=1'-0"

Gray & Osborne, Inc.
CONSULTING ENGINEERS
2102 CARRIAGE DRIVE SW, BUILDING I
OLYMPIA, WA 98502
(360) 292-7481

MICHAEL B. JOHNSON — STATE OF WASHINGTON — 36498 — REGISTERED PROFESSIONAL ENGINEER
4/7/25

MASON COUNTY PUD NO. 1
MANZANITA RESERVOIR AND BOOSTER PUMP STATION
1681 E McREAVY RD
UNION, WA

No.	DATE	REVISION

ISSUED FOR:	BID SET
ISSUE DATE:	APRIL 2025
APPROVED BY:	MBJ
CHECKED BY:	SLG
DRAWN BY:	JPW
DESIGNER:	SLG
G & O JOB NO.:	22260.00
FILE:	LEGEND.DWG

0 1" 2"
TWO INCHES AT FULL SCALE. IF NOT, SCALE ACCORDINGLY

GENERAL

SCHEDULE A, B
ABBREVIATIONS, LINETYPES, SYMBOLS, AND GENERAL NOTES

DRAWING: **G-2** OF: **8**

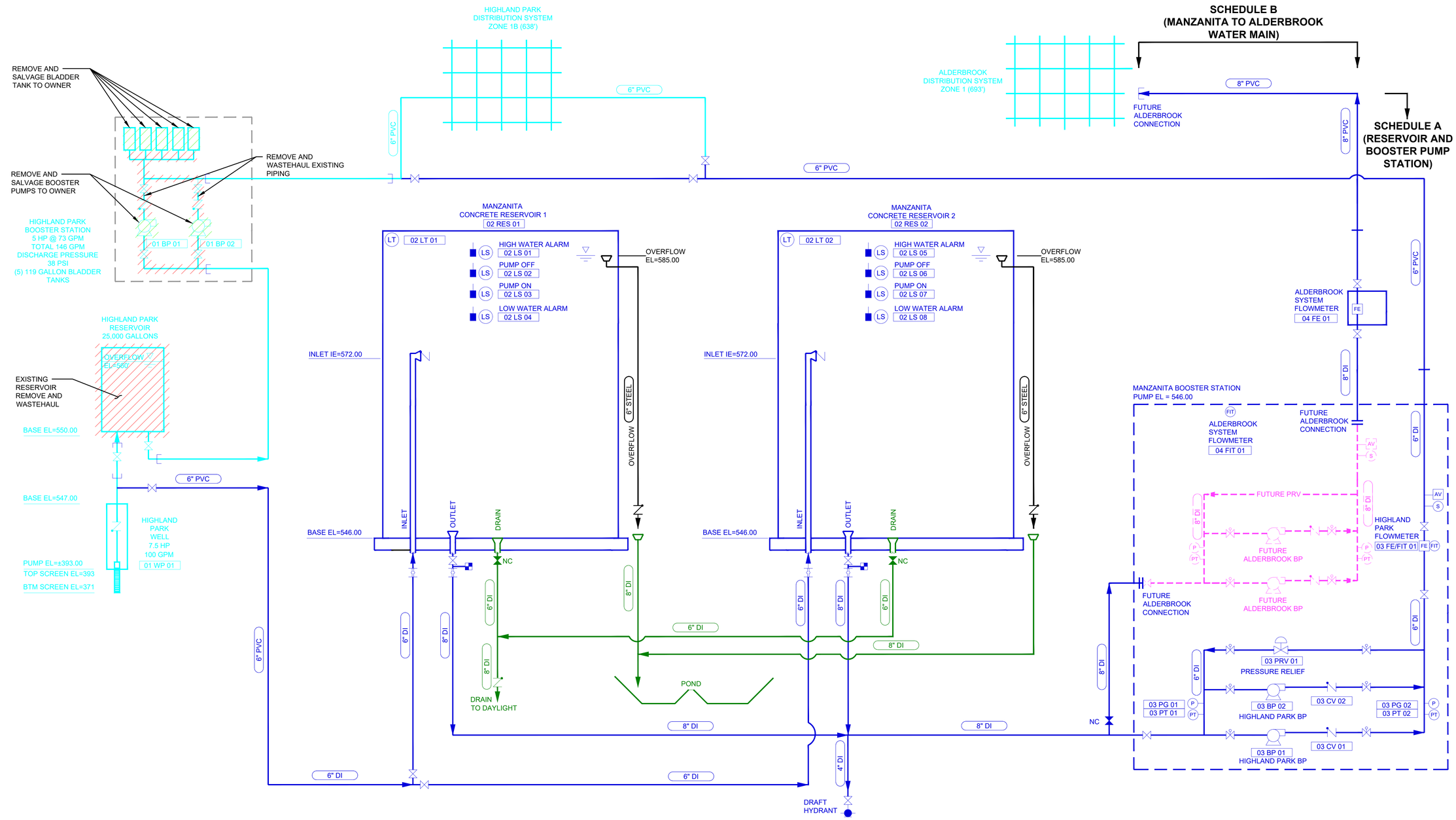

LEGEND

FE FLOWMETER	NORMALLY OPENED VALVE	PROPOSED WATER SYSTEM
P PRESSURE GAUGE	NORMALLY CLOSED VALVE	OVERFLOW
S SAMPLE TAP	NORMALLY OPENED BUTTERFLY VALVE	EXISTING WATER SYSTEM
PRESSURE REDUCING VALVE	NORMALLY CLOSED BUTTERFLY VALVE	DRAIN
AV COMBINATION AIR AND VACUUM VALVE	CHECK VALVE	FUTURE
BOOSTER PUMP	FLEXIBLE EXPANSION JOINT	REMOVE AND WASTEHAUL
LEVEL SENSOR	FIT FLOW INDICATOR/TRANSMITTER	SALVAGE TO OWNER
	LT LEVEL TRANSDUCER	DRAINAGE STRUCTURE
	PT PRESSURE TRANSDUCER	SAMPLE STATION
		DRAFT HYDRANT

PROCESS FLOW DIAGRAM

NTS

DESIGN PARAMETERS

RESERVOIR

NUMBER OF RESERVOIRS	2
TOTAL VOLUME (EACH)	204,000 GALLONS
MATERIAL	CONCRETE
DIAMETER AND SHELL HEIGHT	30' DIA x 40' TALL
OVERFLOW EL.	585'
BASE EL.	546'

MANZANITA BOOSTER STATION

NUMBER OF PUMPS	2 EACH (HIGHLAND PARK)
HORSEPOWER	7.5 HP EACH
CAPACITY	140 GPM @ 130' TDH EACH
OPERATING PRESSURE	38 PSI
NUMBER OF FUTURE PUMPS	2 EACH (ALDERBROOK)
HORSEPOWER	50 HP EACH
CAPACITY	500 GPM @ 230' TDH EACH
OPERATING PRESSURE	62 PSI

Gray & Osborne, Inc.
CONSULTING ENGINEERS
2102 CARRIAGE DRIVE SW, BUILDING I
OLYMPIA, WA 98502
(360) 292-7481

MICHAEL B. JOHNSON
STATE OF WASHINGTON
36498
REGISTERED PROFESSIONAL ENGINEER
4/7/25

MASON COUNTY PUD

MASON COUNTY PUD NO. 1
MANZANITA RESERVOIR AND BOOSTER PUMP STATION
1681 E McREAVY RD
UNION, WA

No.	DATE	REVISION

ISSUED FOR:	BID SET
ISSUE DATE:	APRIL 2025
APPROVED BY:	MBJ
CHECKED BY:	SLG
DRAWN BY:	JPW
DESIGNER:	SLG
G & O JOB NO.:	22260.00
FILE:	PROC_FLOW_DIAGRAM.DWG

0 1" 2"
TWO INCHES AT FULL SCALE.
IF NOT, SCALE ACCORDINGLY

GENERAL

SCHEDULE A, B

PROCESS FLOW DIAGRAM

DRAWING: **G-3** OF: **8**

m:\mason county pud 1\22260.00 manzanita reservoir and booster\02 design\Planset\G-Sheets\PROC_FLOW_DIAGRAM.dwg, 4/4/2025 11:53 AM, JIM WEIS

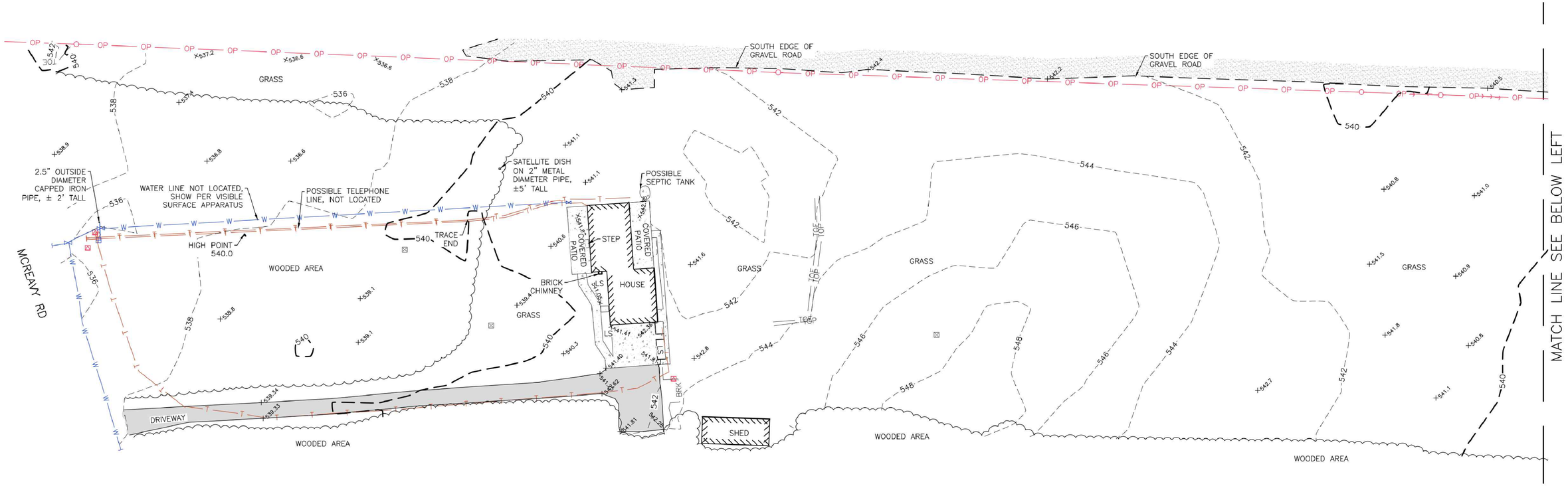

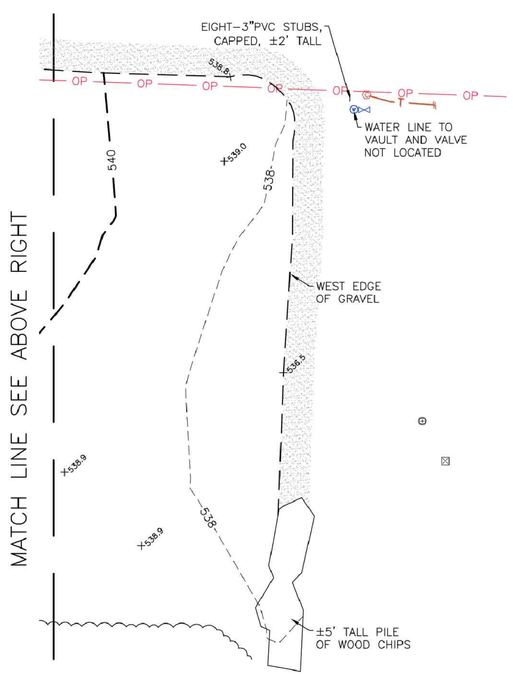

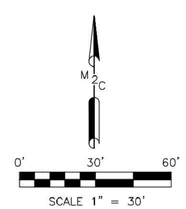

DATUM

HORIZONTAL – WASHINGTON STATE PLANE COORDINATES, SOUTH ZONE, NAD 83/2011 BASED ON GPS TIES TO MONUMENT POST PROCESSED THROUGH OPUS SOLUTION.

VERTICAL – NAVD 88 BASED ON GPS TIES TO MONUMENT POST PROCESSED THROUGH OPUS SOLUTION.

UTILITY NOTE

UTILITIES SHOWN HEREON ARE FROM FIELD MAPPING VISIBLE SURFACE APPURTENANCES, AND MAPPING UTILITY PAINT MARKS FROM A UTILITY LOCATING SERVICE. BURIED UTILITIES ARE ONLY SHOWN AS APPROXIMATE AND SHOULD BE VERIFIED BEFORE CONSTRUCTION.

SURVEY NOTES

1. INSTRUMENT USED: SOKKIA IX 3" TOTAL STATION AND TOPCON VR GPS.
2. THIS SURVEY MEETS OR EXCEEDS THE STANDARDS OF WAC 332-130-145
3. SURVEY COMPLETED 5/9/2022
4. NO BOUNDARY INFORMATION WAS OBTAINED OR COMPLETED.
5. PURPOSE OF TOPOGRAPHICAL MAPPING IS FOR FUTURE DEVELOPMENT OF SITE.
6. CONTOURS WERE ESTABLISHED FROM FIELD MAPPING, 1' CONTOURS SHOWN.
7. MTN2COAST (M2C) WAS RETAINED BY MASON PUD NO.1 TO COMPLETE A TOPOGRAPHIC SURVEY OF TPN 321053100000.

LEGEND

- LS LANDSCAPE
- CABLE RISER/ PEDESTAL
- TELEPHONE RISER
- WATER METER
- WATER VALVE
- WATER VAULT/MANHOLE
- GUY ANCHOR
- POWER POLE
- PP WITH DROP LINE
- POWER TRANSFORMER
- HUB AND TACK
- REBAR AND CONROL CAP
- BURIED TELEPHONE — T — T — T —
- BURIED POWER — P — P — P —
- OVERHEAD POWER — OP — OP —
- WATER LINE — W — W — W —
- BURIED CABLE TV LINE — C — C — C —
- MAJOR CONTOUR
- MINOR CONTOUR
- GROUND TOE — TOE — TOE —
- GROUND TOP — TOP — TOP —
- GROUND BREAK — BRK — BRK —
- GRAVEL
- ASPHALT
- CONCRETE

SCHEDULE A

DATE	5/26/2022
SCALE	1" = 30'
M2C PROJECT NO.:	22-108
DRAWN	MYC
CHECKED	SEP
APPROVED	SEP

5/26/2022

SETH E. PRIGGE — STATE OF WASHINGTON — 21013244 — REGISTERED PROFESSIONAL LAND SURVEYOR

MTN 2 COAST LLC
PROFESSIONAL LAND SURVEYORS
2320 MOTTMAN RD SW, STE 106
TUMWATER, WA 98512
360.688.1949

PROJECT NAME:
1681 E MCREAVY RD
UNION, WA
TOPOGRAPHIC SURVEY

CLIENT NAME:
MASON PUD NO.1

SHEET NAME:
SV-1

G-4 OF: 8

SHEET NO. 1 OF 1

m:\mason county pud 1\22260.00 manzanita reservoir and booster\02 design\Planset\G-Sheets\SV_CTRL.dwg, 4/4/2025 11:53 AM, JIM WEIS

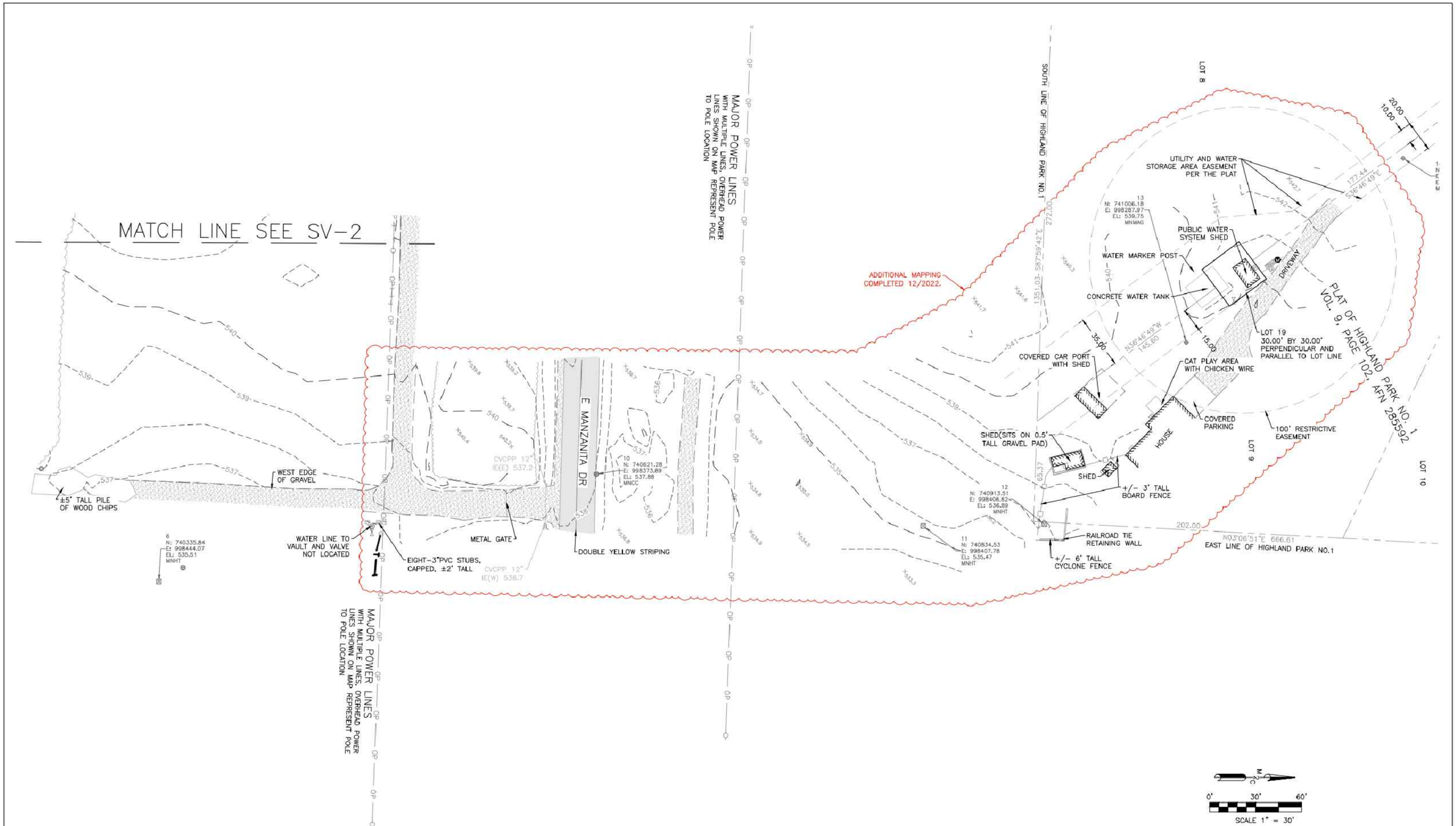

ADDITIONAL TOPOGRAPHIC MAPPING AND BOUNDARY COMPLETED ON DECEMBER 15TH AND 19TH OF 2022 BY MTN2COAST (M2C). M2C ESTABLISHED THE BOUNDARY OF PLAT OF HIGHLAND PARK NO. 1 UNDER AFN 285592 BY TYING OUT AND HOLDING CENTERLINE MONUMENTS FOR ARELLEM ROAD. A FULL BOUNDARY SURVEY WAS NOT COMPLETED BY M2C & NO CORNERS WERE SET.

SCHEDULE A

DATE 12/20/2022	PROFESSIONAL LAND SURVEYORS 2320 MOTTMAN RD SW, STE 106 TUMWATER, WA 98512 360.688.1949	PROJECT NAME: 1681 E MCREAVY RD UNION, WA TOPOGRAPHIC SURVEY	SHEET NAME: SV-2
SCALE 1" = 30'			
M2C PROJECT NO.: 22-108			
DRAWN RMS		CLIENT NAME: MASON PUD NO.1	G-5 OF: 8
CHECKED PBJ			
APPROVED SEP			SHEET NO. 2 OF 2

m:\mason county pud 1\22260.00 manzanita reservoir and booster\02 design\Planset\G-Sheets\SV_CTRL.dwg, 4/4/2025 11:53 AM, JIM WEIS

SURVEY CONTROL & MONUMENTATION

HORIZONTAL DATUM: NAD83/2011

WASHINGTON PLANE COORDINATE SYSTEM, SOUTH ZONE, GRID NORTH

MODIFIED GROUND COORDINATES, SCALED TO GROUND USING AVG. CGF OF 0.99997807 AT BASE POINT G&O #5 (M2C #5)

VERTICAL DATUM: NAVD88

HOLDING MOUNTAIN2COAST ELEVATION ON M2C/G&O #5

POINT	NORTHING	EASTING	ELEV.	DESCRIPTION
2	740551.75	1001189.48	482.16	SSNT=SET NAIL W/ "G&O CONTROL" TAG. AT E EDGE ASPHALT OF ALDERBROOK ENTRANCE AT E COUNTRY CLUB DR W. AT 1/2D OF CURVE. 0.45' SW OF EDGE OF ASPHALT.
3	740541.10	1000708.67	482.76	SSRC=SET 5/8" REBAR W/ RED PLASTIC "G&O CONTROL" CAP. AT GRADE IN N SHOULDER OF E MANZANITA DR. 3.5' N OF N EDGE OF ASPHALT. N8°W OF PEDESTRIAN CROSSING SIGN "FOR 3/4 MILE."
*4	741250.71	998118.16	539.87	SFMC=FOUND MONUMENT IN CASE, 3" BRASS DISC W/ PUNCH STAMPED "12309." DOWN 0.65' IN CASE. AT CENTERLINE OF CULDESAC OF E ARELLEM RD.
5	740351.64	998434.97	535.86	SFRC=FOUND REBAR W/ CAP. 5/8" REBAR W/ RED PLASTIC "MTN2COAST" CAP. AT GRADE. IN CLEARCUT E OF GRAVEL ACCESS ROAD. 39' S77°E OF TIP OF "V" IN GRAVEL ACCESS ROAD. HELD M2C POINT #5 COORDINATES.
10	740621.28	998373.96	537.95	SFRC, 5/8" REBAR W/ RED PLASTIC "MTN2COAST" CAP. AT GRADE. AT N EDGE OF ASPHALT OF E MANZANITA DR. N6°W OF NEW CULVERT WITH BIRDCAGE IN RIPRAP. N25°W OF CENTER GATE TO CLEARCUT/POWER UTILITY SITE. M2C POINT #10.
116	740596.94	999112.98	507.48	SSRC, AT GRADE. 3.5' N OF N EDGE OF ASPHALT OF E MANZANITA DR. 21' E OF CENTERLINE OF POWER LINE ACCESS ROAD E OF N & S PULLOFFS. 15.2' S5°W OF CENTER OF S EDGE OF POWER VAULT LID.
117	740644.33	997367.43	536.87	SFRC, 5/8" REBAR W/ RED PLASTIC "MTN2COAST" CAP. AT GRADE. N75°E OF E END OF "ALDERBROOK" SIGN. N18°E OF STOP SIGN. AT TOP CNETER OF GRAVEL/ROCK BERM.
122	740519.40	1000145.17	507.78	SSRC, AT GRADE. 13.5' S OF S EDGE OF ASPHALT OF E MANZANITA DR. AT BREAK IN TREE LINE ALONG N EDGE OF CLEAR CUT. 1.5' S OF GRADE BREAK.
2001	740259.12	998370.34	539.03	SFP=FOUND PIPE. FOUND 3/4" IRON PIPE. UP 0.3' ABOVE GRADE, LEANING 0.05' TO NNE.
2002	740335.83	998444.14	535.57	SFHT=FOUND HUB W/ TACK.

* NOT SHOWN ON PLAN

80' 40 0 80' 160'

SCALE: 1"=80'

E MANZANITA DR - CONSTRUCTION CENTERLINE ALIGNMENT

SEGMENT	BEGIN STATION	BEGIN NORTHING	BEGIN EASTING	END STATION	END NORTHING	END EASTING	DISTANCE	BEARING	RADIUS	TANGENT	CURVE LENGTH	DELTA
L1	10+00.00	740,611.89	998,319.58	30+51.35	740,536.56	1,000,369.55	2,051.35	S87°53'44"E				
C1	30+51.35	740,536.56	1,000,369.55	36+27.98	740,552.00	1,000,945.58			4,538.24	288.70	576.63	7°16'48"
C2	36+27.98	740,552.00	1,000,945.58	38+23.21	740,536.47	1,001,139.25			572.96	98.57	195.23	19°31'23"
L2	38+23.21	740,536.47	1,001,139.25	38+60.62	740,527.20	1,001,175.49	37.41	S75°39'09"E				
C3	38+60.62	740,527.20	1,001,175.49	39+00.00	740,519.55	1,001,214.10			358.10	19.71	39.38	6°18'02"

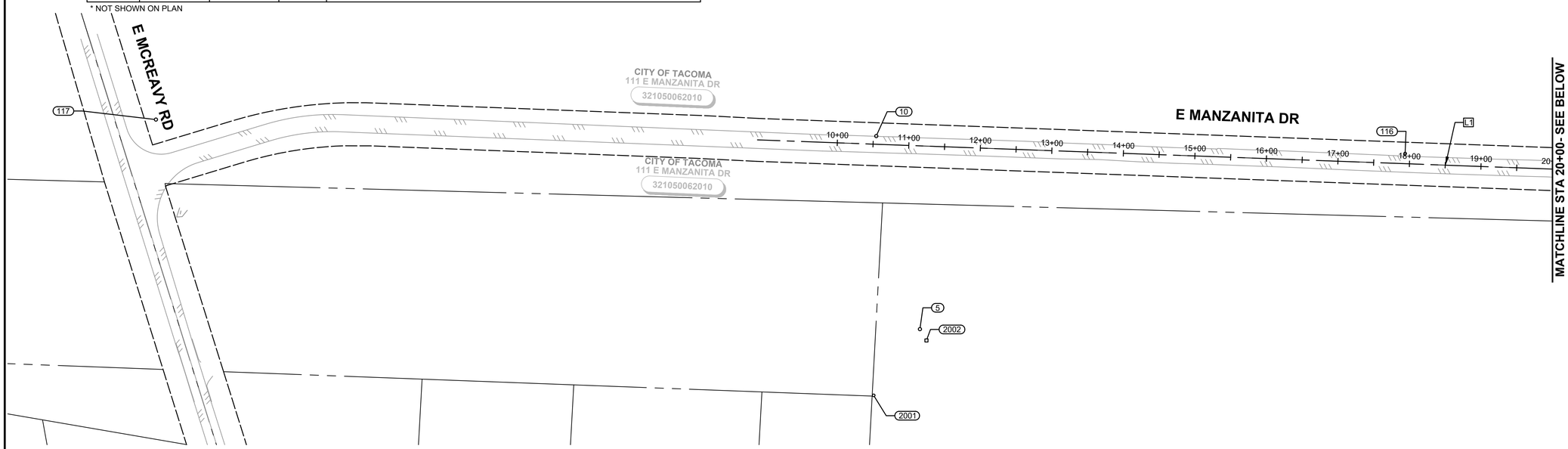

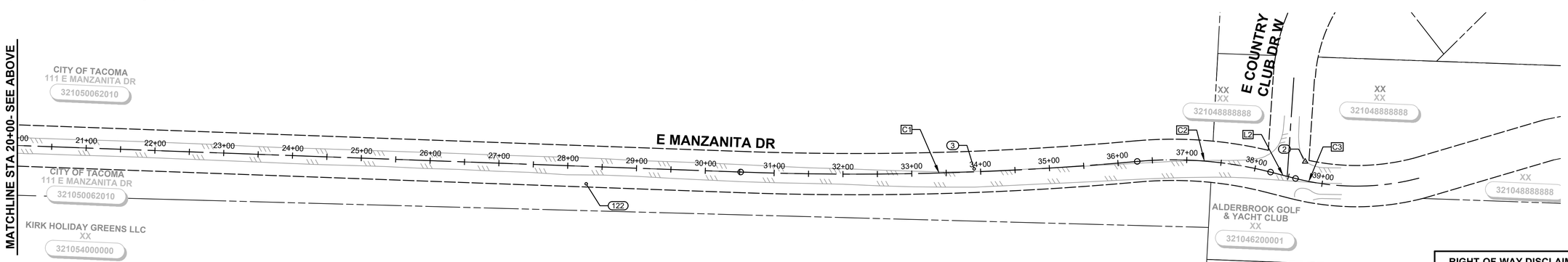

RIGHT-OF-WAY DISCLAIMER

The right-of-way and/or property lines shown hereon are based on available information, not on a surveyed location and are only approximate.

Gray & Osborne, Inc.
CONSULTING ENGINEERS
2102 CARRIAGE DRIVE SW,
BUILDING I
OLYMPIA, WA 98502
(360) 292-7481

MICHAEL B. JOHNSON — STATE OF WASHINGTON — 36498 — REGISTERED PROFESSIONAL ENGINEER — 4/7/25

RICHARD A. BONN — STATE OF WASHINGTON — 40097 — REGISTERED PROFESSIONAL LAND SURVEYOR — 04/07/2025

MASON COUNTY PUD

MASON COUNTY PUD NO. 1
MANZANITA RESERVOIR AND BOOSTER PUMP STATION
1681 E McREAVY RD
UNION, WA

No.	DATE	REVISION

ISSUED FOR:	BID SET
ISSUE DATE:	APRIL 2025
APPROVED BY:	MBJ
CHECKED BY:	SLG
DRAWN BY:	JPW
DESIGNER:	SLG
G & O JOB NO.:	22260.00
FILE:	SV_CTRL-SCH B.DWG

0 1" 2"
TWO INCHES AT FULL SCALE.
IF NOT, SCALE ACCORDINGLY

GENERAL

SCHEDULE B SURVEY CONTROL AND ALIGNMENT TABLES

DRAWING: **G-6** OF: **8**

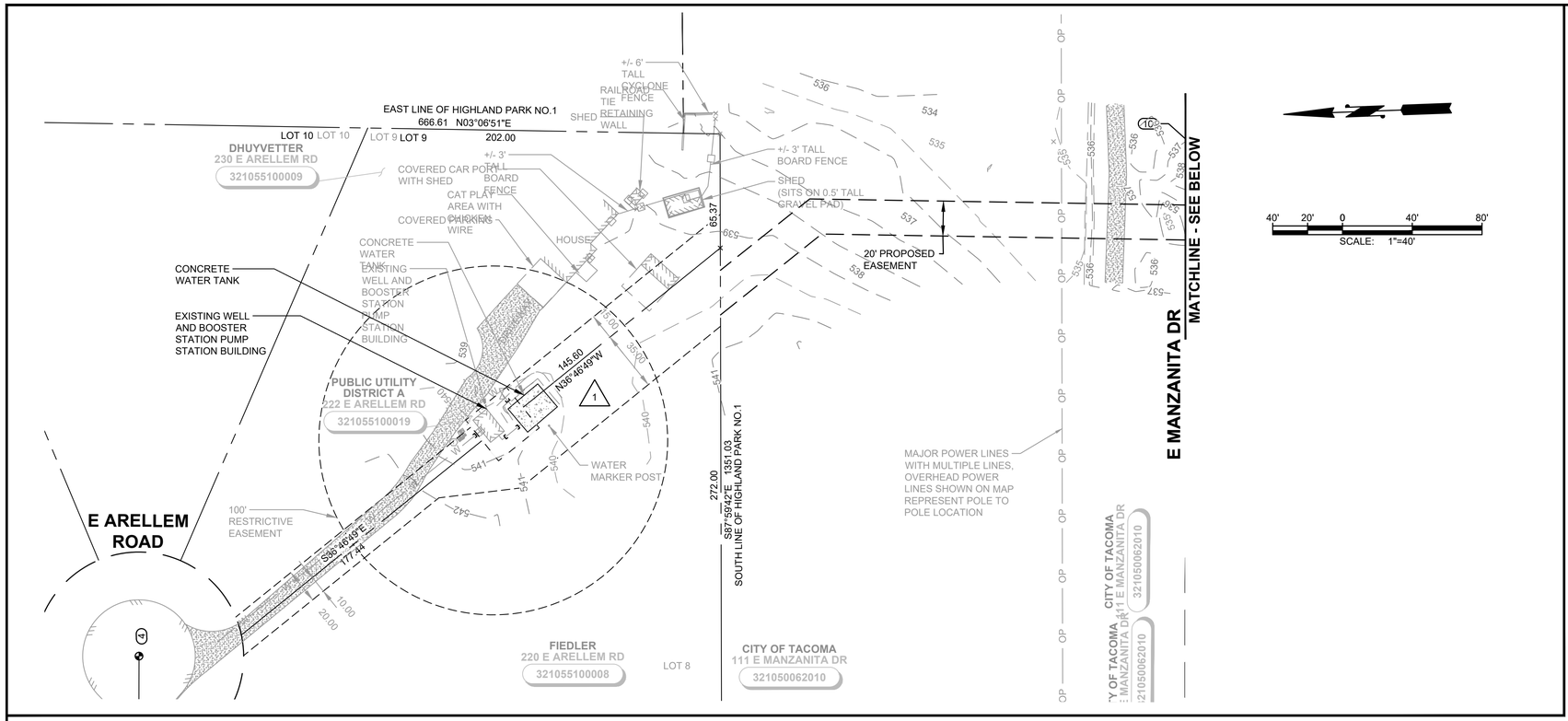

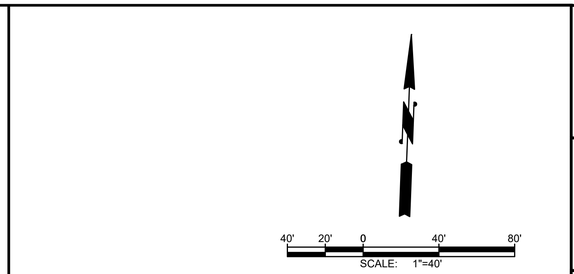

AREA NUMBER

1. HIGHLAND PARK (SCHEDULE A)
2. MANZANITA RESERVOIRS (SCHEDULE A)
3. MANZANITA BOOSTER PUMP STATION BUILDING (SCHEDULE A)
4. ALDERBROOK SYSTEM (SCHEDULE B)

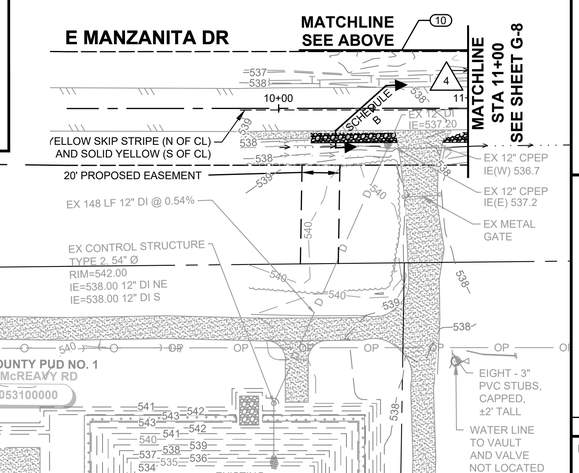

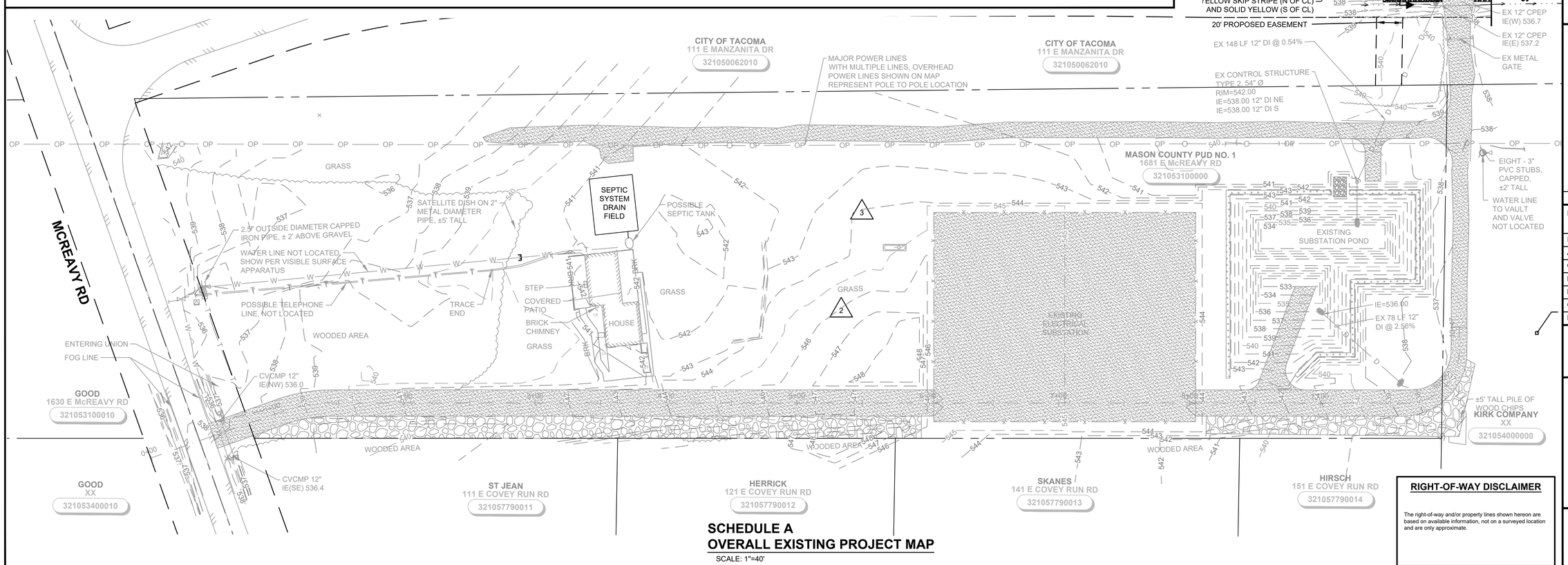

SCHEDULE A
OVERALL EXISTING PROJECT MAP

SCALE: 1"=40'

RIGHT-OF-WAY DISCLAIMER

The right-of-way and/or property lines shown hereon are based on available information, not on a surveyed location and are only approximate.

Gray & Osborne, Inc.
CONSULTING ENGINEERS
2102 CARRIAGE DRIVE SW, BUILDING I
OLYMPIA, WA 98502
(360) 292-7481

MICHAEL B. JOHNSON — STATE OF WASHINGTON — 36498 — REGISTERED PROFESSIONAL ENGINEER
4/7/25

MASON COUNTY PUD

MASON COUNTY PUD NO. 1
MANZANITA RESERVOIR AND BOOSTER PUMP STATION
1681 E McREAVY RD
UNION, WA

No.	DATE	REVISION

ISSUED FOR:	BID SET
ISSUE DATE:	APRIL 2025
APPROVED BY:	MBJ
CHECKED BY:	SLG
DRAWN BY:	JPW
DESIGNER:	SLG
G & O JOB NO.:	22260.00
FILE:	OVERALL EX PLAN.DWG

0 1" 2"
TWO INCHES AT FULL SCALE. IF NOT, SCALE ACCORDINGLY

GENERAL

SCHEDULE A
OVERALL EXISTING PROJECT MAP

DRAWING: **G-7** OF: **8**

m:\mason county pud 1\22260.00 manzanita reservoir and booster\02 design\Planset\G-Sheets\OVERALL EX PLAN.dwg, 4/4/2025 11:55 AM, JIM WEIS

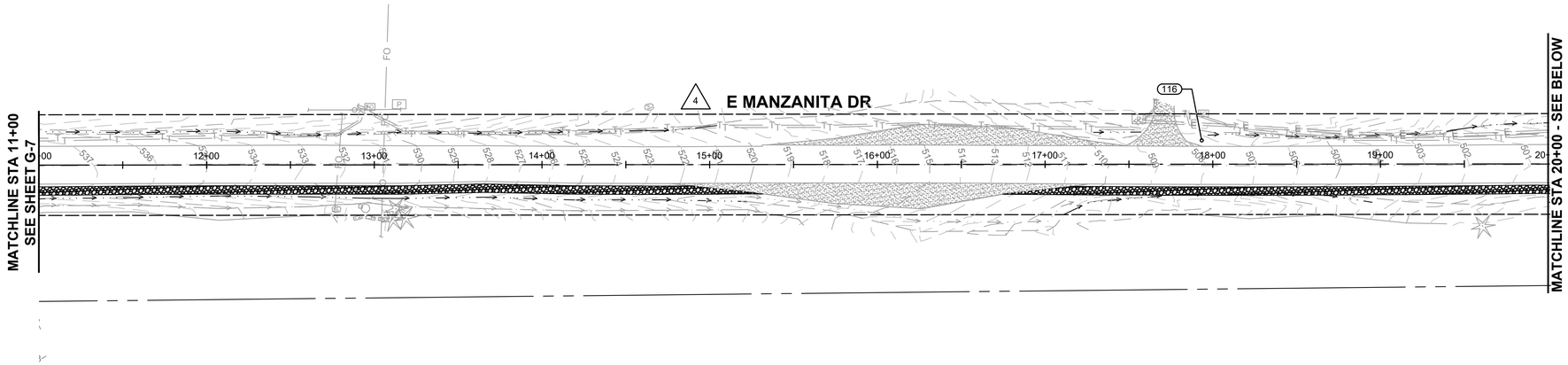

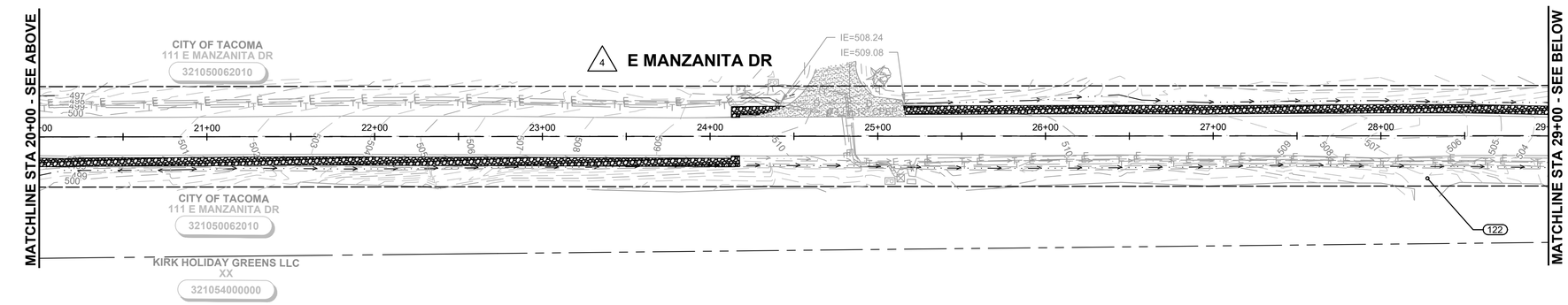

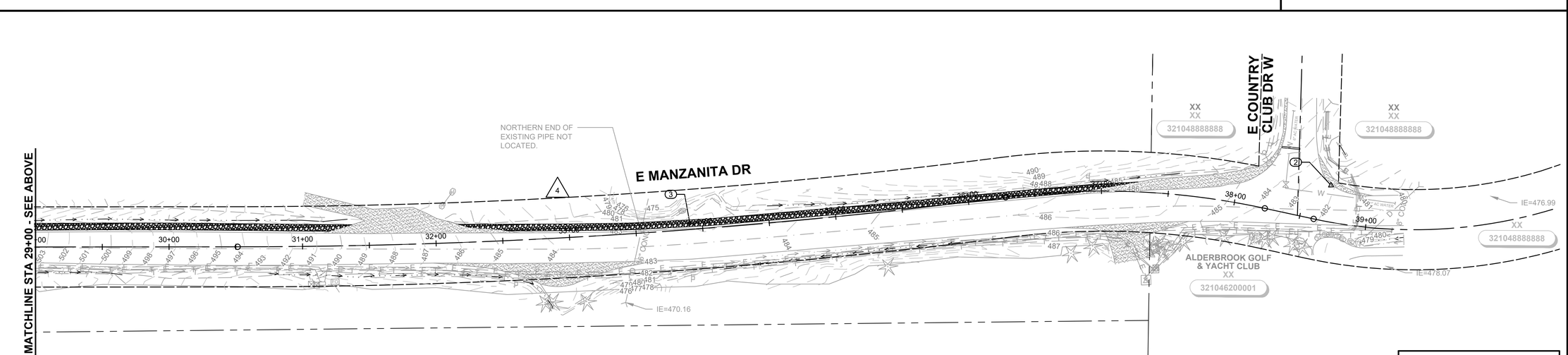

AREA NUMBER

1. HIGHLAND PARK (SCHEDULE A)
2. MANZANITA RESERVOIRS (SCHEDULE A)
3. MANZANITA BOOSTER PUMP STATION BUILDING (SCHEDULE A)
4. ALDERBROOK SYSTEM (SCHEDULE B)

40' 20' 0 40' 80'
SCALE: 1"=40'

RIGHT-OF-WAY DISCLAIMER

The right-of-way and/or property lines shown hereon are based on available information, not on a surveyed location and are only approximate.

SCHEDULE B
OVERALL EXISTING PROJECT MAP

SCALE: 1"=40'

Gray & Osborne, Inc.
CONSULTING ENGINEERS
2102 CARRIAGE DRIVE SW,
BUILDING I
OLYMPIA, WA 98502
(360) 292-7481

MICHAEL B. JOHNSON
STATE OF WASHINGTON
36488
REGISTERED
PROFESSIONAL ENGINEER
4/7/25

MASON COUNTY PUD

MASON COUNTY PUD NO. 1
MANZANITA RESERVOIR AND BOOSTER PUMP STATION
1681 E McREAVY RD
UNION, WA

No.	DATE	REVISION

ISSUED FOR:	BID SET
ISSUE DATE:	APRIL 2025
APPROVED BY:	MBJ
CHECKED BY:	SLG
DRAWN BY:	JPW
DESIGNER:	SLG
G & O JOB NO.:	22260.00
FILE:	OVERALL EX PLAN.DWG

0 1" 2"
TWO INCHES AT FULL SCALE.
IF NOT, SCALE ACCORDINGLY

GENERAL

SCHEDULE B
OVERALL EXISTING PROJECT MAP

DRAWING: **G-8** OF: **8**

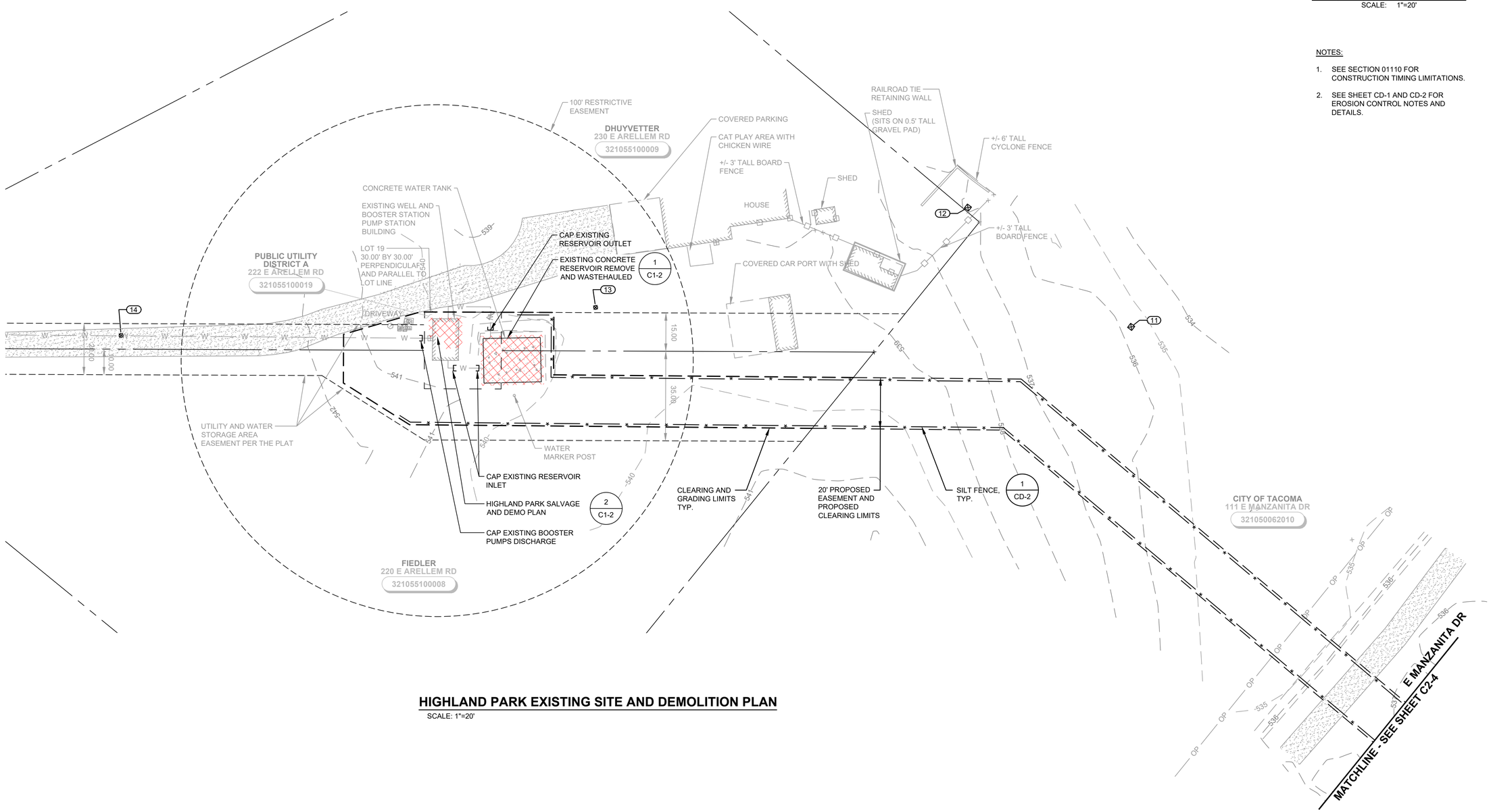

HIGHLAND PARK EXISTING SITE AND DEMOLITION PLAN

SCALE: 1"=20'

20' 10' 0 20' 40'

SCALE: 1"=20'

NOTES:

1. SEE SECTION 01110 FOR CONSTRUCTION TIMING LIMITATIONS.
2. SEE SHEET CD-1 AND CD-2 FOR EROSION CONTROL NOTES AND DETAILS.

RIGHT-OF-WAY DISCLAIMER

The right-of-way and/or property lines shown hereon are based on available information, not on a surveyed location and are only approximate.

Gray & Osborne, Inc.
CONSULTING ENGINEERS
2102 CARRIAGE DRIVE SW, BUILDING I
OLYMPIA, WA 98502
(360) 292-7481

MICHAEL B. JOHNSON
STATE OF WASHINGTON
36498
REGISTERED PROFESSIONAL ENGINEER
4/7/25

MASON COUNTY PUD NO. 1
MANZANITA RESERVOIR AND BOOSTER PUMP STATION
1681 E McREAVY RD
UNION, WA

No.	DATE	REVISION

ISSUED FOR:	BID SET
ISSUE DATE:	APRIL 2025
APPROVED BY:	MBJ
CHECKED BY:	SLG
DRAWN BY:	JPW
DESIGNER:	SLG
G & O JOB NO.:	22260.00
FILE:	HP DEMO PLAN.DWG

0 1" 2"
TWO INCHES AT FULL SCALE.
IF NOT, SCALE ACCORDINGLY

CIVIL

SCHEDULE A, B
HIGHLAND PARK EXISTING SITE AND DEMOLITION SITE PLAN

DRAWING: **C1-1** OF: **3**

DEMOLITION NOTES:

1. EXISTING RESERVOIR AND BOOSTER STATION TO REMAIN IN SERVICE UNTIL NEW BOOSTER STATION AND RESERVOIRS ARE DISINFECTED, COMMISSIONED, AND CONNECTED TO SYSTEM AND IN SERVICE.
2. ISOLATE AND DRAIN EXISTING RESERVOIR BEFORE BEGINNING DEMOLITION WORK.
3. REMOVE AND WASTEHAUL EXISTING RESERVOIR AND APPURTENANCES.
4. REMOVE AND WASTEHAUL OR SALVAGE TO OWNER EXISTING BOOSTER STATION COMPONENTS.
5. DEMOLISH EXISTING SITE PIPING AND APPURTENANCES, CAP ALL CUT PIPES THAT ARE TO REMAIN CONNECTED TO THE SYSTEM.

1 / C1-1 **PHOTO DETAIL**
EXISTING RESERVOIR DEMOLITION PLAN
NOT TO SCALE

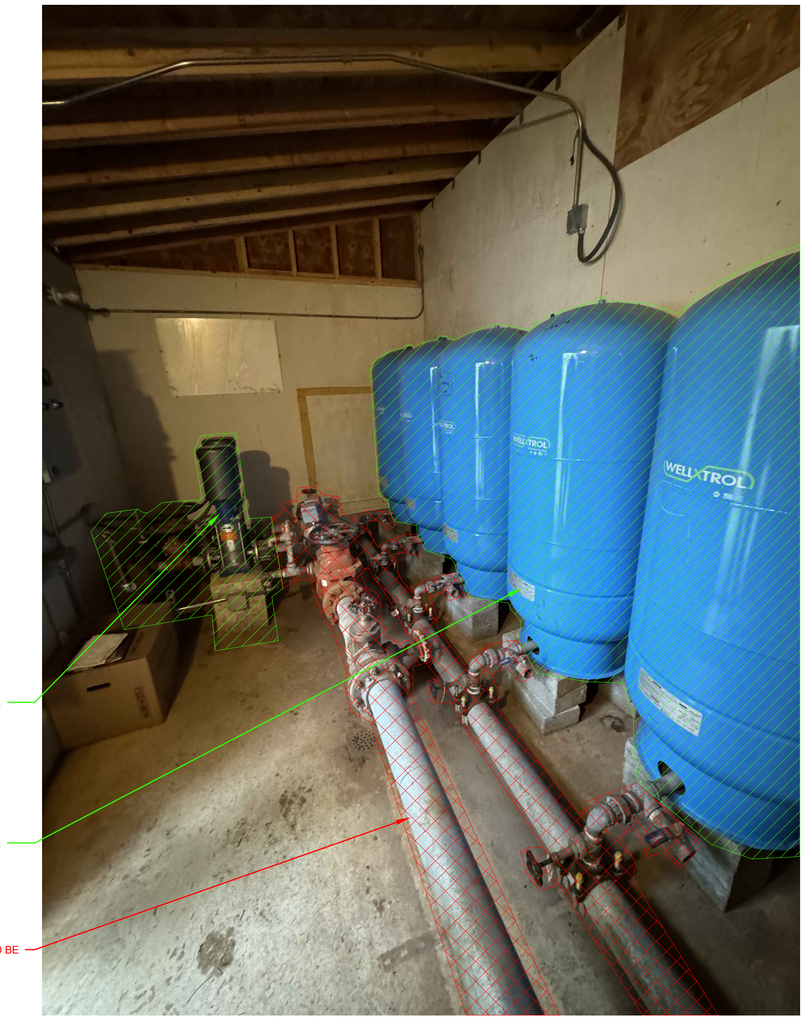

2 / C1-1 **PHOTO DETAIL**
HIGHLAND PARK SALVAGE AND DEMOLITION PLAN
NOT TO SCALE

Gray & Osborne, Inc.
CONSULTING ENGINEERS
2102 CARRIAGE DRIVE SW, BUILDING I
OLYMPIA, WA 98502
(360) 292-7481

MICHAEL B. JOHNSON
STATE OF WASHINGTON
36498
REGISTERED PROFESSIONAL ENGINEER
4/7/25

MASON COUNTY PUD NO. 1
MANZANITA RESERVOIR AND BOOSTER PUMP STATION
1681 E McREAVY RD
UNION, WA

No.	DATE	REVISION

ISSUED FOR:	BID SET
ISSUE DATE:	APRIL 2025
APPROVED BY:	MBJ
CHECKED BY:	SLG
DRAWN BY:	JPW
DESIGNER:	SLG
G & O JOB NO.:	22260.00
FILE:	HP DEMO PLAN.DWG

0 1" 2"
TWO INCHES AT FULL SCALE.
IF NOT, SCALE ACCORDINGLY

CIVIL

SCHEDULE A, B
HIGHLAND PARK SALVAGE AND DEMOLITION PLAN

DRAWING: **C1-2** OF: **3**

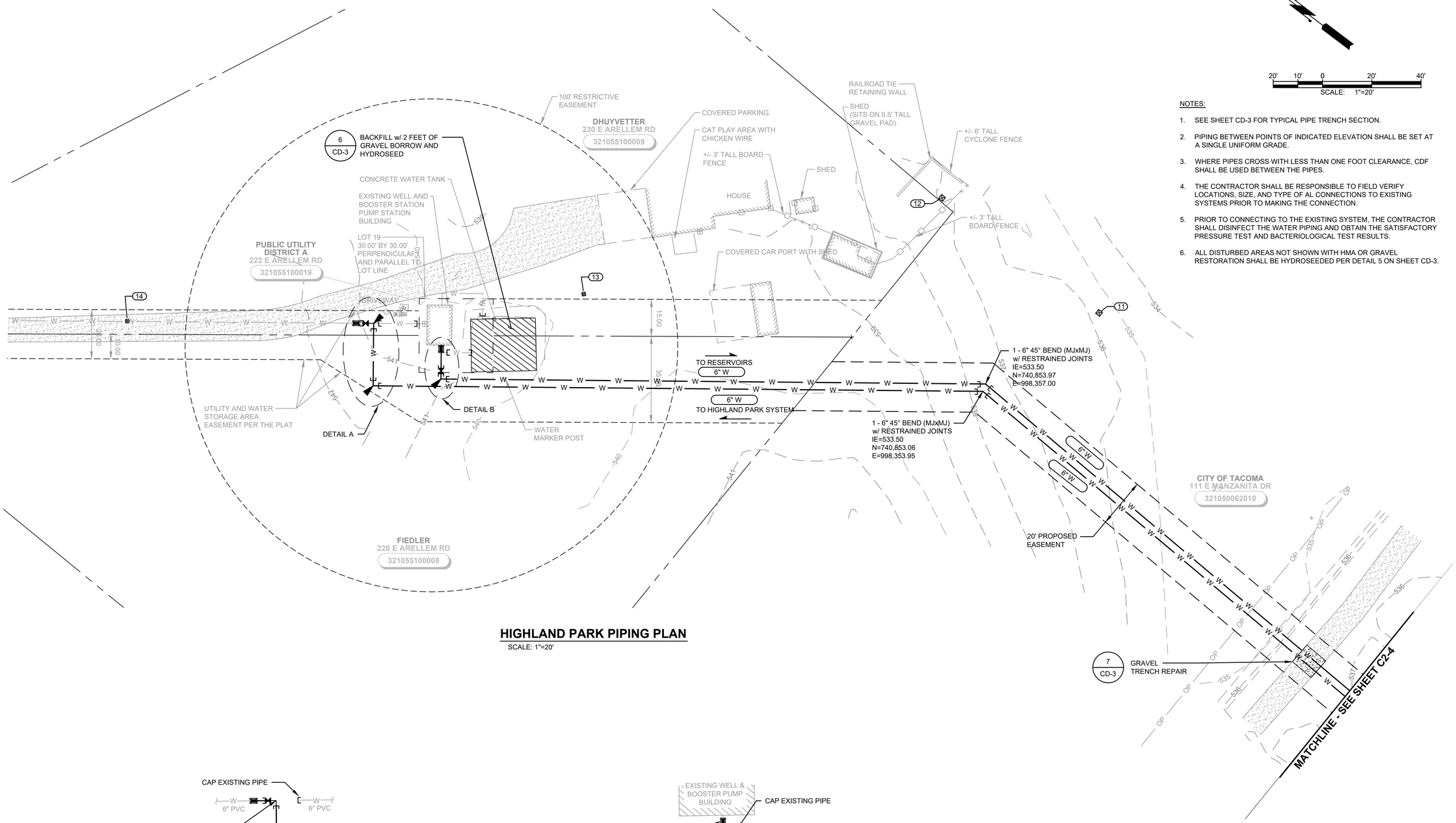

HIGHLAND PARK PIPING PLAN

SCALE: 1"=20'

NOTES:

1. SEE SHEET CD-3 FOR TYPICAL PIPE TRENCH SECTION.
2. PIPING BETWEEN POINTS OF INDICATED ELEVATION SHALL BE SET AT A SINGLE UNIFORM GRADE.
3. WHERE PIPES CROSS WITH LESS THAN ONE FOOT CLEARANCE, CDF SHALL BE USED BETWEEN THE PIPES.
4. THE CONTRACTOR SHALL BE RESPONSIBLE TO FIELD VERIFY LOCATIONS, SIZE, AND TYPE OF AL CONNECTIONS TO EXISTING SYSTEMS PRIOR TO MAKING THE CONNECTION.
5. PRIOR TO CONNECTING TO THE EXISTING SYSTEM, THE CONTRACTOR SHALL DISINFECT THE WATER PIPING AND OBTAIN THE SATISFACTORY PRESSURE TEST AND BACTERIOLOGICAL TEST RESULTS.
6. ALL DISTURBED AREAS NOT SHOWN WITH HMA OR GRAVEL RESTORATION SHALL BE HYDROSEEDED PER DETAIL 5 ON SHEET CD-3.

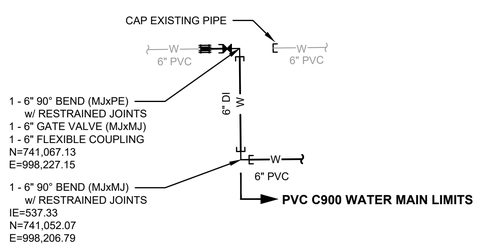

DETAIL A

NOT TO SCALE

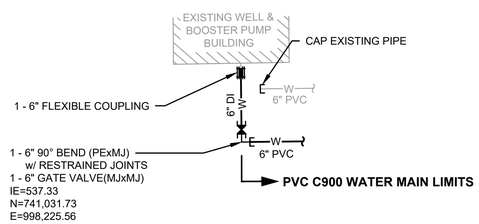

DETAIL B

NOT TO SCALE

RIGHT-OF-WAY DISCLAIMER

The right-of-way and/or property lines shown hereon are based on available information, not on a surveyed location and are only approximate.

Gray & Osborne, Inc.
CONSULTING ENGINEERS
2102 CARRIAGE DRIVE SW, BUILDING I
OLYMPIA, WA 98502
(360) 292-7481

MICHAEL B. JOHNSON — STATE OF WASHINGTON — 36498 — REGISTERED PROFESSIONAL ENGINEER
4/7/25

MASON COUNTY PUD

MASON COUNTY PUD NO. 1
MANZANITA RESERVOIR AND BOOSTER PUMP STATION
1681 E McREAVY RD
UNION, WA

No.	DATE	REVISION

ISSUED FOR:	BID SET
ISSUE DATE:	APRIL 2025
APPROVED BY:	MBJ
CHECKED BY:	SLG
DRAWN BY:	JPW
DESIGNER:	SLG
G & O JOB NO.:	22260.00
FILE:	P - WATER PLAN.DWG

0 1" 2"
TWO INCHES AT FULL SCALE. IF NOT, SCALE ACCORDINGLY

CIVIL

SCHEDULE A, B
HIGHLAND PARK PIPING PLAN

DRAWING: **C1-3** OF: **3**

NOTES:

1. SEE SHEET CD-1 AND CD-2 FOR EROSION CONTROL REQUIREMENTS.
2. SEE SECTION O1110 FOR CONSTRUCTION LIMITS.

40' 20' 0 40' 80'
SCALE: 1"=40'

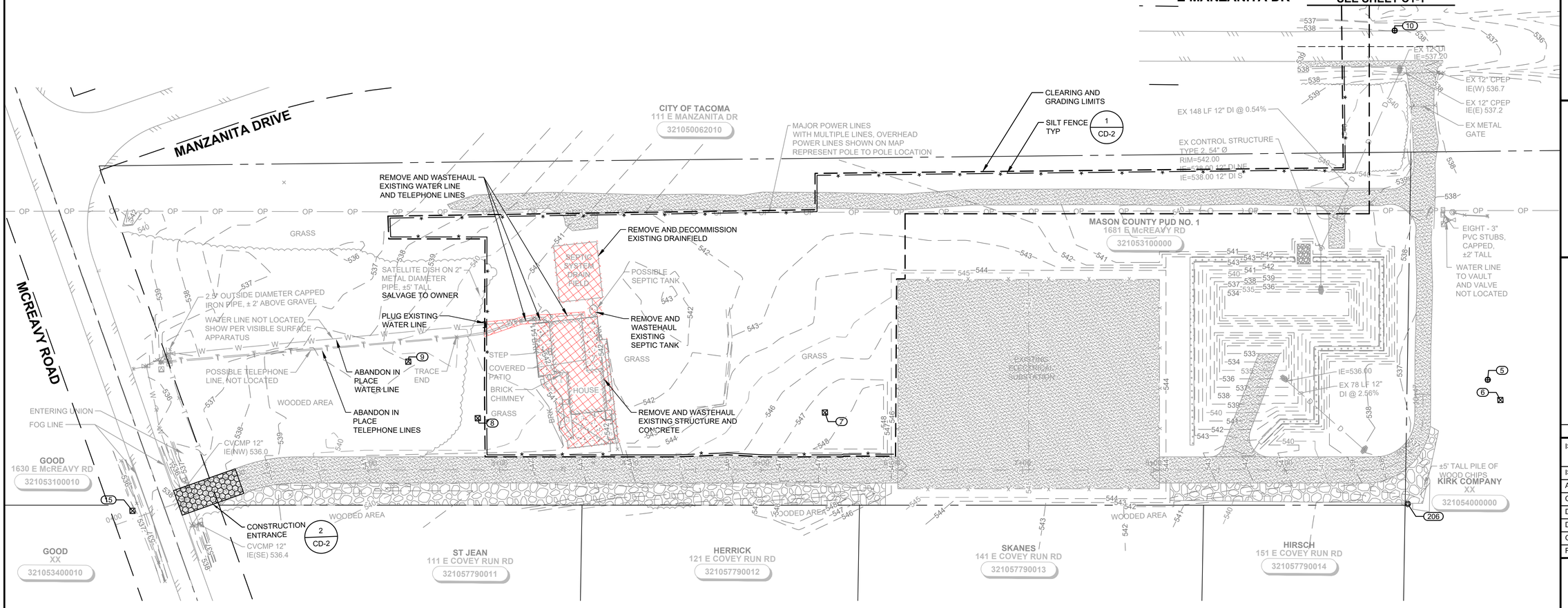

MANZANITA EXISTING SITE AND DEMOLITION PLAN

SCALE: 1"=40'

RIGHT-OF-WAY DISCLAIMER

The right-of-way and/or property lines shown hereon are based on available information, not on a surveyed location and are only approximate.

Gray & Osborne, Inc.
CONSULTING ENGINEERS
2102 CARRIAGE DRIVE SW, BUILDING I
OLYMPIA, WA 98502
(360) 292-7481

MICHAEL B. JOHNSON — STATE OF WASHINGTON — 36498 — REGISTERED PROFESSIONAL ENGINEER
4/7/25

MASON COUNTY PUD NO. 1
MANZANITA RESERVOIR AND BOOSTER PUMP STATION
1681 E McREAVY RD
UNION, WA

No.	DATE	REVISION

ISSUED FOR:	BID SET
ISSUE DATE:	APRIL 2025
APPROVED BY:	MBJ
CHECKED BY:	SLG
DRAWN BY:	JPW
DESIGNER:	SLG
G & O JOB NO.:	22260.00
FILE:	DEMO - SITE PLAN.DWG

0 1" 2"
TWO INCHES AT FULL SCALE. IF NOT, SCALE ACCORDINGLY

CIVIL

SCHEDULE A, B
MANZANITA EXISTING SITE AND DEMOLITION PLAN

DRAWING: **C2-1** OF: **8**

m:\mason county pud 1\22260.00 manzanita reservoir and booster\02 design\Planset\C-Sheets\DEMO - SITE PLAN.dwg, 4/4/2025 11:58 AM, JIM WEIS

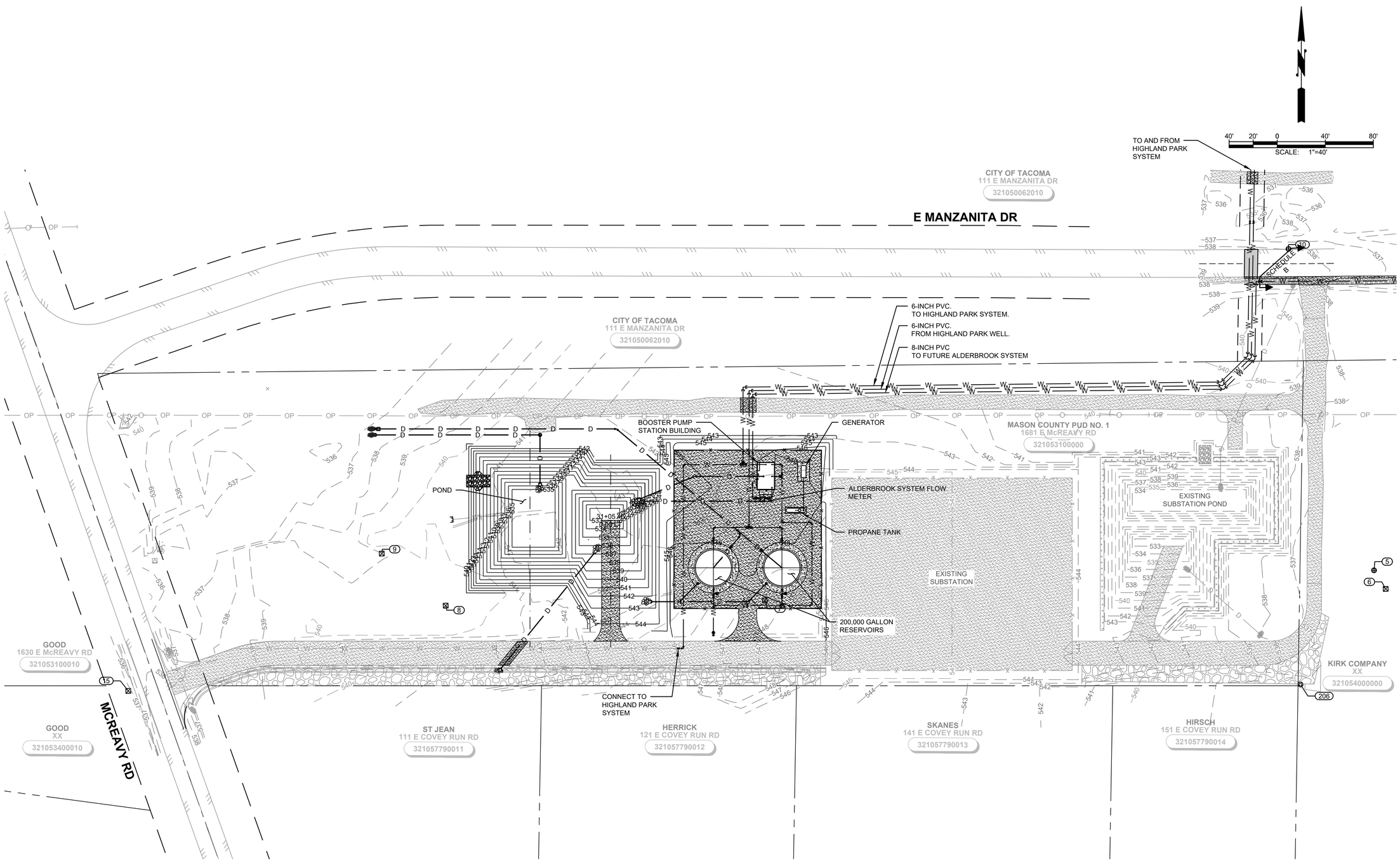

MANZANITA PROPOSED OVERALL PLAN

SCALE: 1"=40'

RIGHT-OF-WAY DISCLAIMER

The right-of-way and/or property lines shown hereon are based on available information, not on a surveyed location and are only approximate.

Gray & Osborne, Inc.
CONSULTING ENGINEERS
2102 CARRIAGE DRIVE SW,
BUILDING I
OLYMPIA, WA 98502
(360) 292-7481

MICHAEL B. JOHNSON
STATE OF WASHINGTON
36498
REGISTERED
PROFESSIONAL ENGINEER
4/7/25

MASON COUNTY PUD NO. 1
MANZANITA RESERVOIR AND BOOSTER PUMP STATION
1681 E McREAVY RD
UNION, WA

No.	DATE	REVISION

ISSUED FOR:	BID SET
ISSUE DATE:	APRIL 2025
APPROVED BY:	MBJ
CHECKED BY:	SLG
DRAWN BY:	JPW
DESIGNER:	SLG
G & O JOB NO.:	22260.00
FILE:	P-OVERALL.DWG

0 1" 2"
TWO INCHES AT FULL SCALE.
IF NOT, SCALE ACCORDINGLY

CIVIL

SCHEDULE A, B
PROPOSED OVERALL PLAN

DRAWING: **C2-2** OF: **8**

m:\mason county pud 1\22260.00 manzanita reservoir and booster\02 design\Planset\C-Sheets\P-OVERALL.dwg, 4/4/2025 11:59 AM, JIM WEIS

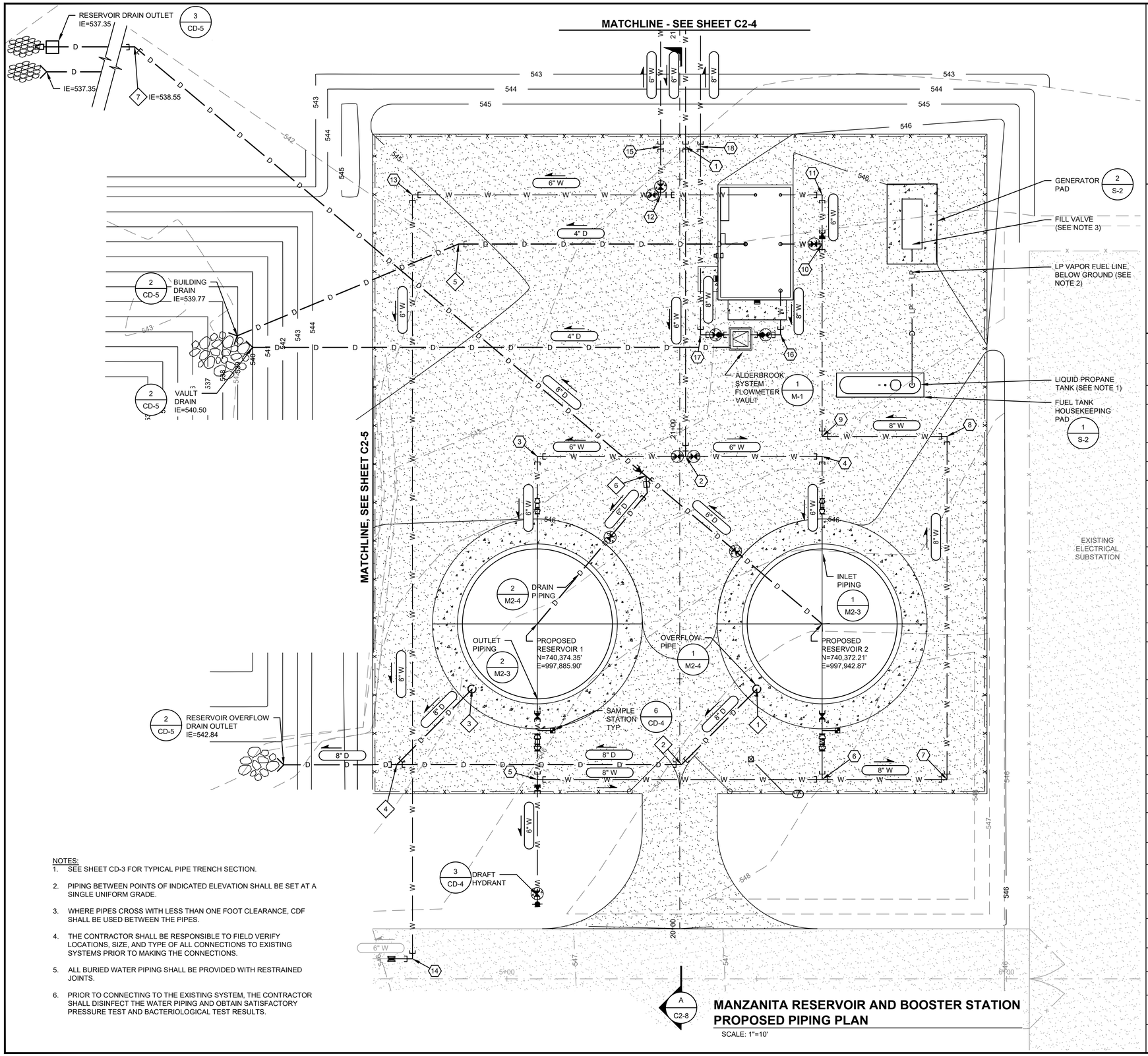

MANZANITA RESERVOIR AND BOOSTER STATION PROPOSED PIPING PLAN

SCALE: 1"=10'

NOTES:

1. SEE SHEET CD-3 FOR TYPICAL PIPE TRENCH SECTION.
2. PIPING BETWEEN POINTS OF INDICATED ELEVATION SHALL BE SET AT A SINGLE UNIFORM GRADE.
3. WHERE PIPES CROSS WITH LESS THAN ONE FOOT CLEARANCE, CDF SHALL BE USED BETWEEN THE PIPES.
4. THE CONTRACTOR SHALL BE RESPONSIBLE TO FIELD VERIFY LOCATIONS, SIZE, AND TYPE OF ALL CONNECTIONS TO EXISTING SYSTEMS PRIOR TO MAKING THE CONNECTIONS.
5. ALL BURIED WATER PIPING SHALL BE PROVIDED WITH RESTRAINED JOINTS.
6. PRIOR TO CONNECTING TO THE EXISTING SYSTEM, THE CONTRACTOR SHALL DISINFECT THE WATER PIPING AND OBTAIN SATISFACTORY PRESSURE TEST AND BACTERIOLOGICAL TEST RESULTS.

10' 5' 0 10' 20'
SCALE: 1"=10'

PROPANE NOTES:

1. THE OWNER'S PROPANE VENDOR, PEAK PROPANE, WILL PROVIDE AND INSTALL A "1,000 WATER GALLON" LIQUID PROPANE TANK THAT WILL SUPPLY A VAPOR SUPPLY TO THE GENERATOR. EARTHWORK, TRENCHING, BACKFILL, AND RESTORATION SHALL BE BY GENERAL CONTRACTOR.
2. THE LP VAPOR LINE, A 1ST STAGE PROPANE REGULATOR AT THE FUEL TANK AND A 2ND STAGE REGULATOR AT THE GENERATOR SHALL BE SIZED, PROVIDED AND LOCATED BY THE OWNER'S PROPANE VENDOR TO ALLOW THE GENERATOR TO OPERATE AT 100% LOAD PER NFPA 58. THE GENERATOR HAS A FUEL CONSUMPTION RATE OF 220 CUBIC FEET PER HOUR AT 100% LOAD. CONTRACTOR TO CONNECT TO THE GENERATOR.
3. LOCATE THE FILLER VALVE ON THE WEST SIDE OF THE FUEL TANK.

WATER SYSTEM

POINT	NORTHING	EASTING	INVERT EL	
1	N=740,468.67	E=997,919.14	542.00	1 - 6" VERTICAL BEND (MJxMJ)
2	N=740,406.71	E=997,916.81	542.00	1 - 6" TEE (FLxFL) 2 - 6" GATE VALVES (FLxMJ) 1 - 6" FLANGE ADAPTER (FLxMJ)
3	N=740,407.83	E=997,887.16	542.00	1 - 6" 90° BEND (MJxMJ)
4	N=740,405.69	E=997,944.12	542.00	1 - 6" 90° BEND (MJxMJ)
5	N=740,343.23	E=997,884.74	542.00	1 - 8" TEE (MJxMJ) 1 - 8" x 6" REDUCER (PExMJ)
6	N=740,341.09	E=997,941.70	542.00	1 - 8" TEE (MJxMJ)
7	N=740,340.15	E=997,966.68	542.00	1 - 8" 90° BEND (MJxMJ)
8	N=740,408.75	E=997,969.26	542.00	1 - 8" 90° BEND (MJxMJ)
9	N=740,409.69	E=997,944.27	542.00	1 - 8" 90° BEND (MJxMJ)
10	N=740,448.16	E=997,945.72	542.00	1 - 8" TEE (MJxFL) 1 - 8" GATE VALVE (FLxMJ) 1 - 8" X 6" REDUCER (PExMJ)
11	N=740,457.98	E=997,946.09	542.08	1-6" 90° BEND (MJxMJ)
12	N=740,459.20	E=997,913.78	541.00	1 - 6" TEE (FLxFL) 2 - 6" GATE VALVES (FLxMJ) 1 - 6" FLANGE ADAPTER (FLxMJ)
13	N=740,461.06	E=997,864.14	541.00	1 - 6" 90° BEND (MJxMJ)
14	N=740,308.33	E=997,858.41	541.00	1 - 6" 90° BEND (MJxMJ) w/ THRUST BLOCK CONNECT TO EXISTING w/ 6" FLEXIBLE COUPLING
15	N=740,468.86	E=997,914.14	541.00	1 - 6" VERTICAL BEND (MJxMJ)
16	N=740,438.73	E=997,948.37	542.33	1 - 8" 90° BEND (MJxMJ)
17	N=740,468.53	E=997,922.11	542.33	1 - 8" 90° BEND (MJXMJ)
18	N=740,430.92	E=997,920.72	542.33	1-8" VERTICAL VEND (MJXMJ)

DRAIN SYSTEM

POINT	NORTHING	EASTING	INVERT EL	TYPE
1	N=740,359.66	E=997,929.33	543.33	OVERFLOW PIPE 1-8" 90° BEND (MJxMJ)
2	N=740,345.15	E=997,913.69	543.22	1-8" 45° BEND (MJxMJ)
3	N=740,361.80	E=997,872.37	543.33	OVERFLOW PIPE 1-8" 90° BEND (MJxMJ)
4	N=740,347.29	E=997,856.73	542.94	1-8" WYE (MJxMJ)
5	N=740,343.23	E=997,884.74	540.50	1-8" 45° BEND (MJxMJ)
6	N=740,403.12	E=997,908.72	539.01	1-8" WYE (MJxMJ) 1-6" 45 ° BEND (MJxMJ) 1-8"x6" REDUCER (MJxPE)
7	N=740,492.77	E=997,809.68	538.55	1-8" 45° BEND (MJxMJ)

Gray & Osborne, Inc.
CONSULTING ENGINEERS
2102 CARRIAGE DRIVE SW,
BUILDING I
OLYMPIA, WA 98502
(360) 292-7481

MICHAEL B. JOHNSON
STATE OF WASHINGTON
36498
REGISTERED PROFESSIONAL ENGINEER
4/7/25

MASON COUNTY PUD

MASON COUNTY PUD NO. 1
MANZANITA RESERVOIR AND BOOSTER PUMP STATION
1681 E McREAVY RD
UNION, WA

No.	DATE	REVISION

ISSUED FOR:	BID SET
ISSUE DATE:	APRIL 2025
APPROVED BY:	MBJ
CHECKED BY:	SLG
DRAWN BY:	JPW
DESIGNER:	SLG
G & O JOB NO.:	22260.00
FILE:	P - PIPE-PLAN.DWG

0 1" 2"
TWO INCHES AT FULL SCALE.
IF NOT, SCALE ACCORDINGLY

CIVIL

SCHEDULE A, B
RESERVOIR AND BOOSTER STATION PIPING PLAN

DRAWING: **C2-3** OF: **8**

m:\mason county pud 1\22260.00 manzanita reservoir and booster\02 design\Planset\C-Sheets\P - PIPE-PLAN.dwg, 4/4/2025 12:00 PM, JIM WEIS

NOTES:

1. SEE SPECIFICATION SECTION 01110 FOR CONSTRUCTION TIMING LIMITATIONS.
2. EROSION CONTROL MEASURES SHALL BE INSTALLED PRIOR TO CONSTRUCTION ACTIVITIES. SEE SHEET CD-1 AND CD-2.
3. ALL DISTURBED AREAS NOT SHOWN WITH HMA OR GRAVEL SHALL BE HYDROSEEDED PER DETAIL 3 ON SHEET CD-5.
4. EXISTING UTILITIES IN E MANZANITA DR NOT SHOWN. CONTRACTOR TO CALL FOR UTILITY LOCATES PRIOR TO CONSTRUCTION.

20' 10' 0 20' 40'
SCALE: 1"=20'

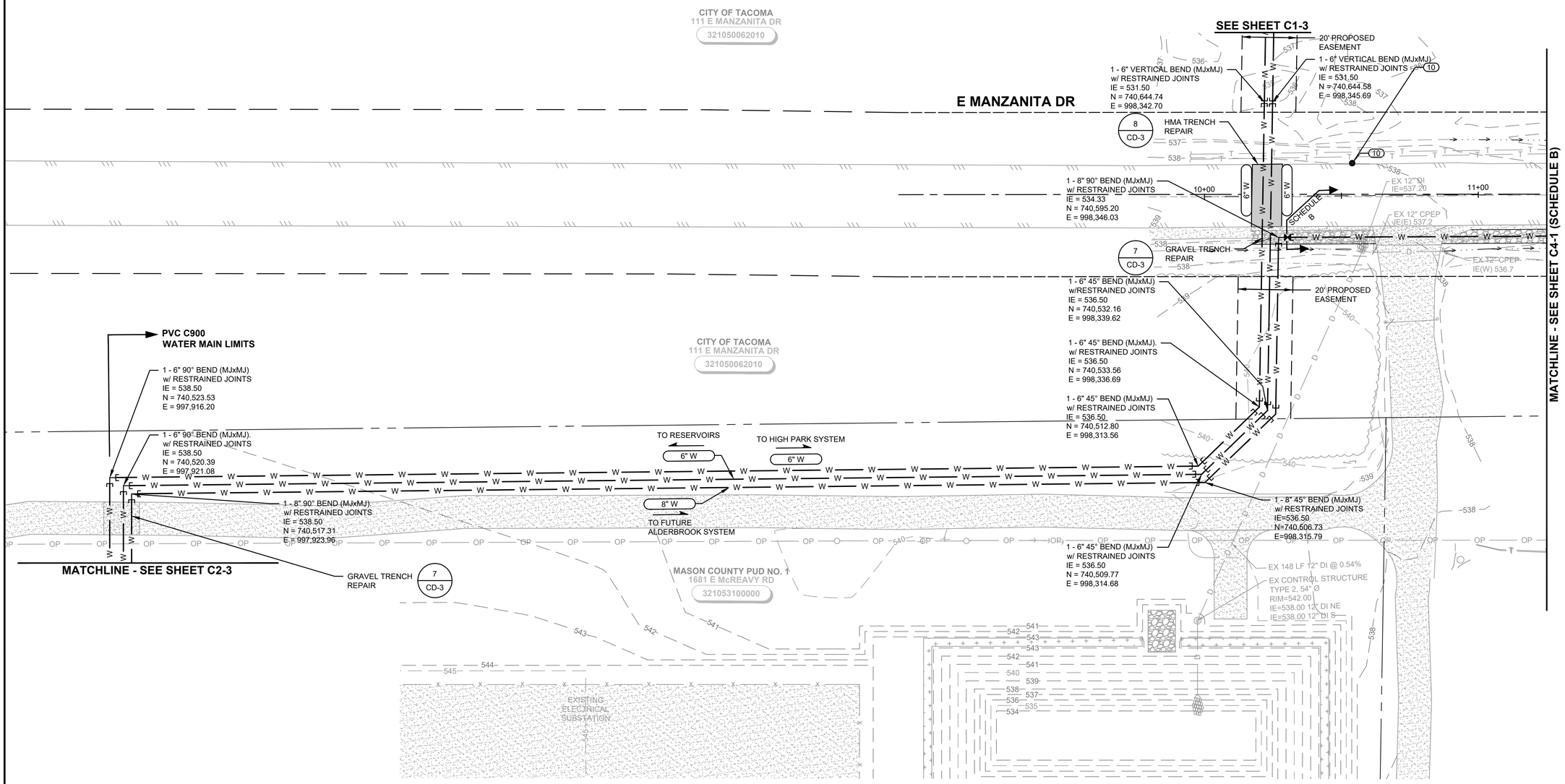

WATER MAIN PLAN

SCALE: 1"=20'

RIGHT-OF-WAY DISCLAIMER

The right-of-way and/or property lines shown hereon are based on available information, not on a surveyed location and are only approximate.

Gray & Osborne, Inc.
CONSULTING ENGINEERS
2102 CARRIAGE DRIVE SW, BUILDING I
OLYMPIA, WA 98502
(360) 292-7481

MICHAEL B. JOHNSON — STATE OF WASHINGTON — 36498 — REGISTERED PROFESSIONAL ENGINEER
4/7/25

MASON COUNTY PUD

MASON COUNTY PUD NO. 1
MANZANITA RESERVOIR AND BOOSTER PUMP STATION
1681 E McREAVY RD
UNION, WA

No.	DATE	REVISION

ISSUED FOR:	BID SET
ISSUE DATE:	APRIL 2025
APPROVED BY:	MBJ
CHECKED BY:	SLG
DRAWN BY:	JPW
DESIGNER:	SLG
G & O JOB NO.:	22260.00
FILE:	WAT_MAIN.DWG

0 1" 2"
TWO INCHES AT FULL SCALE. IF NOT, SCALE ACCORDINGLY

CIVIL

SCHEDULE A, B
PROPOSED WATER MAIN PLAN

DRAWING: **C2-4** OF: **8**

m:\mason county pud 1\22260.00 manzanita reservoir and booster\02 design\Planset\C-Sheets\WAT_MAIN.dwg, 4/4/2025 12:01 PM, JIM WEIS

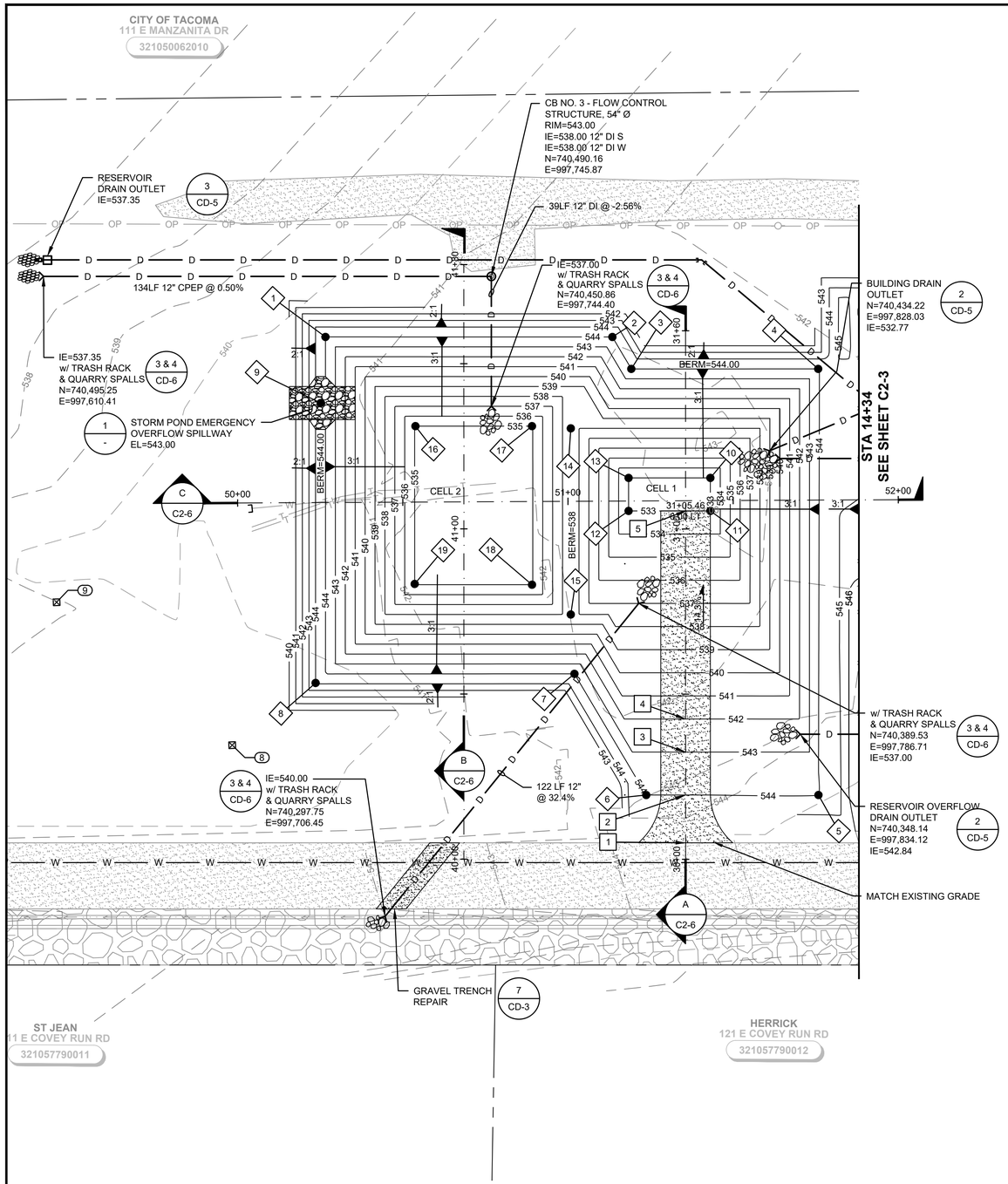

MANZANITA PROPOSED STORMWATER POND PLAN

SCALE: 1"=20'

STORMWATER POND INFORMATION

FACILITY TYPE	DETENTION / WETPOND
BOTTOM ELEVATION (CELL 1)	533.00
BOTTOM ELEVATION (CELL 2)	535.00
SEDIMENT STORAGE ELEVATION (CELL 1)	534.00
REQUIRED DEAD STORAGE VOLUME (WATER QUALITY)	0.309 AC-FT
DESIGN DEAD STORAGE AREA (WATER QUALITY)	0.398 AC-FT
WATER QUALITY SURFACE ELEVATION	538 FT
BERM ELEVATION	544.00
EMERGENCY OVERFLOW WATER SURFACE ELEVATION	543.00'
REQUIRED LIVE STORAGE VOLUME (DETENTION)	0.614 AC-FT
DESIGN LIVE STORAGE AREA (DETENTION)	0.910 AC-FT
TOP OF LIVE STORAGE SURFACE	542.00

STORMWATER POND ACCESS ROAD INFORMATION

POINT #	ITEM	NORTHING & EASTING		ELEVATION
1	BEGIN ACCESS RD	N=740,316.59	E=997,798.21	544.73*
2	GRADE BREAK	N=740,331.05	E=997,798.74	544.00
3	GRADE BREAK	N=740,344.04	E=997,799.23	543.00
4	GRADE BREAK	N=740,354.04	E=997,799.60	542.00
5	BOTTOM CELL 1	N=740,416.98	E=997,802.15	533.00

* MATCH EXISTING ELEVATION

STORMWATER POND GRADING INFORMATION

POINT #	ITEM	NORTHING AND EASTING	
1	POND TOP	N=740,473.73	E=997,695.00
2	POND TOP	N=740,470.45	E=997,781.80
3	POND TOP	N=740,460.58	E=997,787.15
4	POND TOP	N=740,458.44	E=997,844.06
5	POND TOP	N=740,329.55	E=997,838.93
6	POND TOP	N=740,331.50	E=997,786.83
7	POND TOP	N=740,368.98	E=997,766.24
8	POND TOP	N=740,368.91	E=997,688.07
9	EMERGENCY OVERFLOW SPILLWAY	N=740,453.79	E=997,692.82
10	CELL 1 BOTTOM	N=740,426.70	E=997,809.83
11	CELL 1 BOTTOM	N=740,416.71	E=997,809.46
12	CELL 1 BOTTOM	N=740,417.64	E=997,784.72
13	CELL 1 BOTTOM	N=740,427.63	E=997,785.10
14	WETPOND BERM	N=740,443.28	E=997,768.18
15	WETPOND BERN	N=740,386.97	E=997,766.06
16	CELL 2 BOTTOM	N=740,445.72	E=997,721.20
17	CELL 2 BOTTOM	N=740,444.39	E=997,756.46
18	CELL 2 BOTTOM	N=740,396.42	E=997,754.67
19	CELL 2 BOTTOM	N=740,397.75	E=997,719.41

20' 10' 0 20' 40'
SCALE: 1"=20'

NOTES:

1. NUMERICAL CALL-OUTS REFER TO FINISHED GRADE ELEVATIONS UNLESS OTHERWISE NOTED.
2. SLOPE FINISHED GROUND AWAY FROM ALL STRUCTURES; SLOPE TO DRAIN AT 2% MIN SLOPE.
3. EROSION CONTROL MEASURES SHALL BE INSTALLED PRIOR TO CONSTRUCTION ACTIVITIES. SEE SHEET CD-1 AND C-2.
4. SEE DETAIL 8 ON CD-3 FOR PLANTING OF POND. ALL OTHER DISTURBED AREAS NOT SHOWN WITH GRAVEL RESTORATION SHALL BE HYDROSEEDED PER DETAIL 5 ON SHEET CD-3.
5. SEE SPECIFICATION SECTION 01110 FOR CONSTRUCTION TIMING LIMITATIONS.

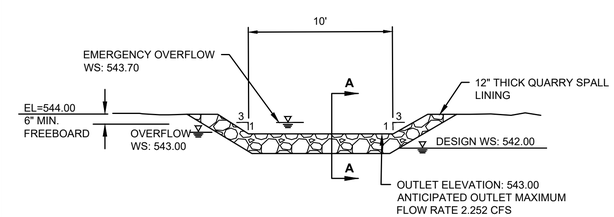

EMERGENCY OVERFLOW SPILLWAY

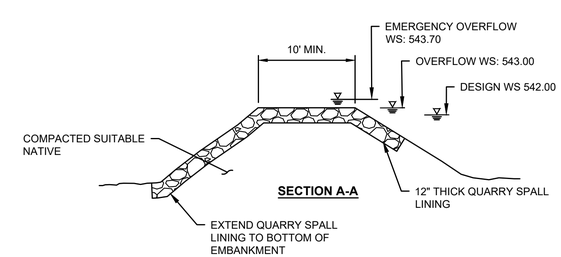

1 TYP **STORMPOND OVERFLOW DETAIL**
NOT TO SCALE

RIGHT-OF-WAY DISCLAIMER

The right-of-way and/or property lines shown hereon are based on available information, not on a surveyed location and are only approximate.

Gray & Osborne, Inc.
CONSULTING ENGINEERS
2102 CARRIAGE DRIVE SW, BUILDING I
OLYMPIA, WA 98502
(360) 292-7481

MICHAEL B. JOHNSON
STATE OF WASHINGTON
36498
REGISTERED PROFESSIONAL ENGINEER
4/7/25

MASON COUNTY PUD

MASON COUNTY PUD NO. 1
MANZANITA RESERVOIR AND BOOSTER PUMP STATION
1681 E McREAVY RD
UNION, WA

No.	DATE	REVISION

ISSUED FOR:	BID SET
ISSUE DATE:	APRIL 2025
APPROVED BY:	MBJ
CHECKED BY:	SLG
DRAWN BY:	JPW
DESIGNER:	SLG
G & O JOB NO.:	22260.00
FILE:	POND_GRADE.DWG

0 1" 2"
TWO INCHES AT FULL SCALE. IF NOT, SCALE ACCORDINGLY

CIVIL

SCHEDULE A, B
PROPOSED STORMWATER POND GRADING AND PIPING PLAN

DRAWING: **C2-5** OF: **8**

m:\mason county pud 1\22260.00 manzanita reservoir and booster\02 design\Planset\C-Sheets\POND_GRADE.dwg, 4/4/2025 12:02 PM, JIM WEIS

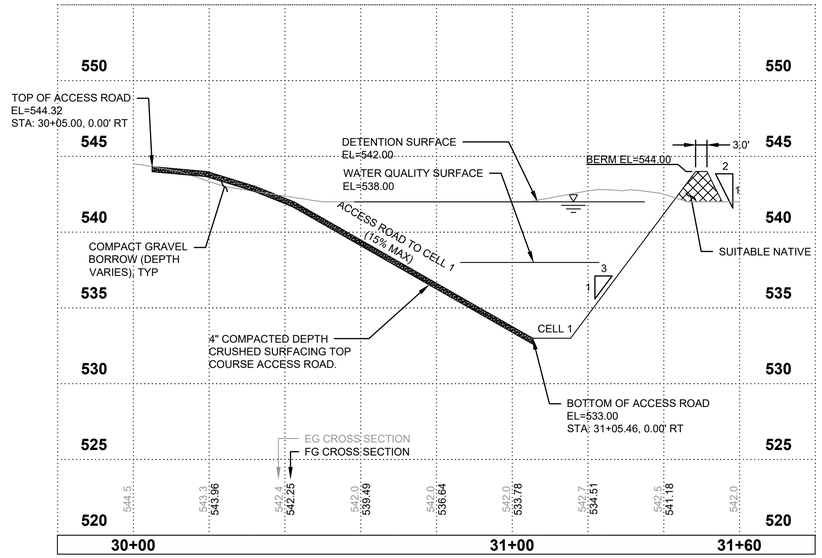

A
C2-5

POND SECTION

SCALE H: 1"=20'-0"
V: 1"=5'-0"

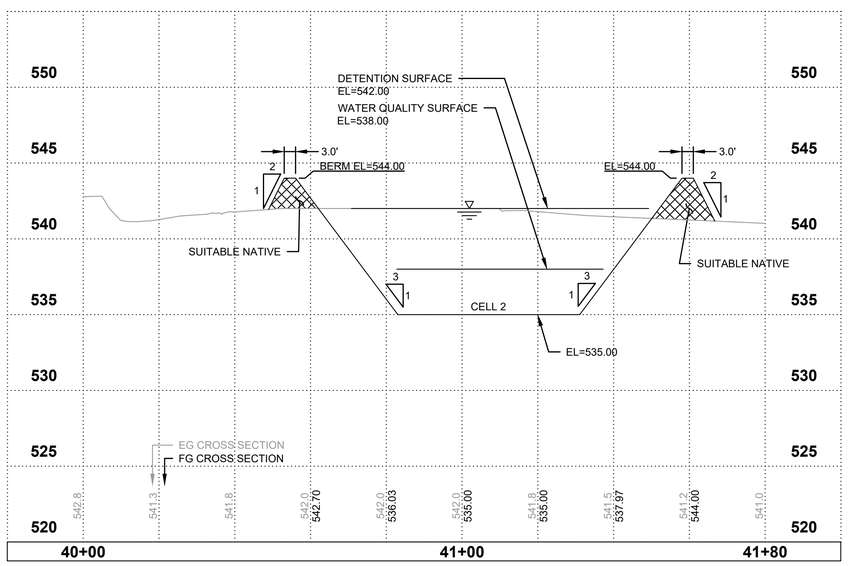

B
C2-5

POND SECTION

SCALE H: 1"=20'-0"
V: 1"=5'-0"

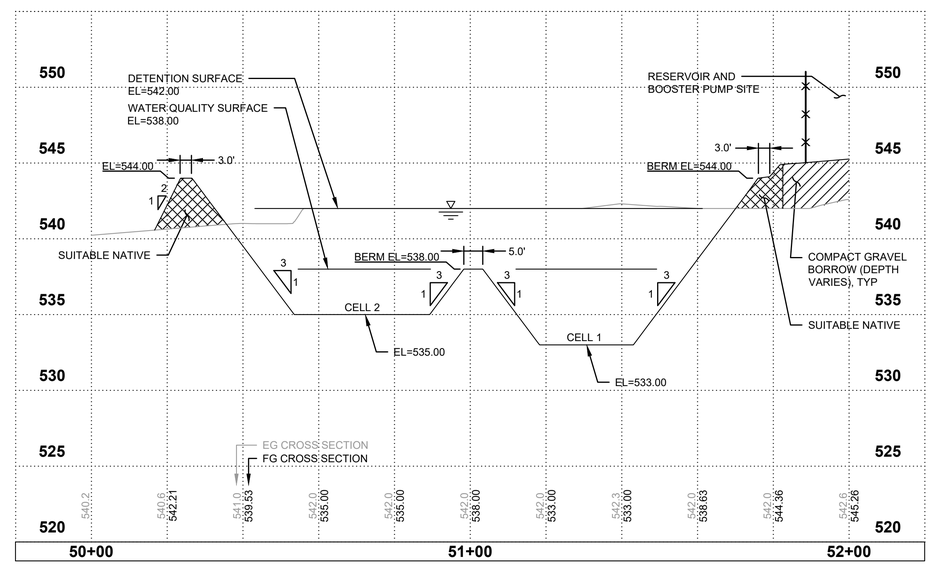

C
C2-5

POND SECTION

SCALE H: 1"=20'-0"
V: 1"=5'-0"

RIGHT-OF-WAY DISCLAIMER

The right-of-way and/or property lines shown hereon are based on available information, not on a surveyed location and are only approximate.

Gray & Osborne, Inc.
CONSULTING ENGINEERS
2102 CARRIAGE DRIVE SW,
BUILDING I
OLYMPIA, WA 98502
(360) 292-7481

MICHAEL B. JOHNSON
STATE OF WASHINGTON
36498
REGISTERED
PROFESSIONAL ENGINEER
4/7/25

MASON COUNTY PUD

MASON COUNTY PUD NO. 1
MANZANITA RESERVOIR AND BOOSTER PUMP STATION
1681 E McREAVY RD
UNION, WA

No.	DATE	REVISION

ISSUED FOR:	BID SET
ISSUE DATE:	APRIL 2025
APPROVED BY:	MBJ
CHECKED BY:	SLG
DRAWN BY:	JPW
DESIGNER:	SLG
G & O JOB NO.:	22260.00
FILE:	POND_GRADE.DWG

0 1" 2"
TWO INCHES AT FULL SCALE.
IF NOT, SCALE ACCORDINGLY

CIVIL

SCHEDULE A, B
PROPOSED STORMWATER POND GRADING AND PIPING SECTIONS

DRAWING: **C2-6** OF: **8**

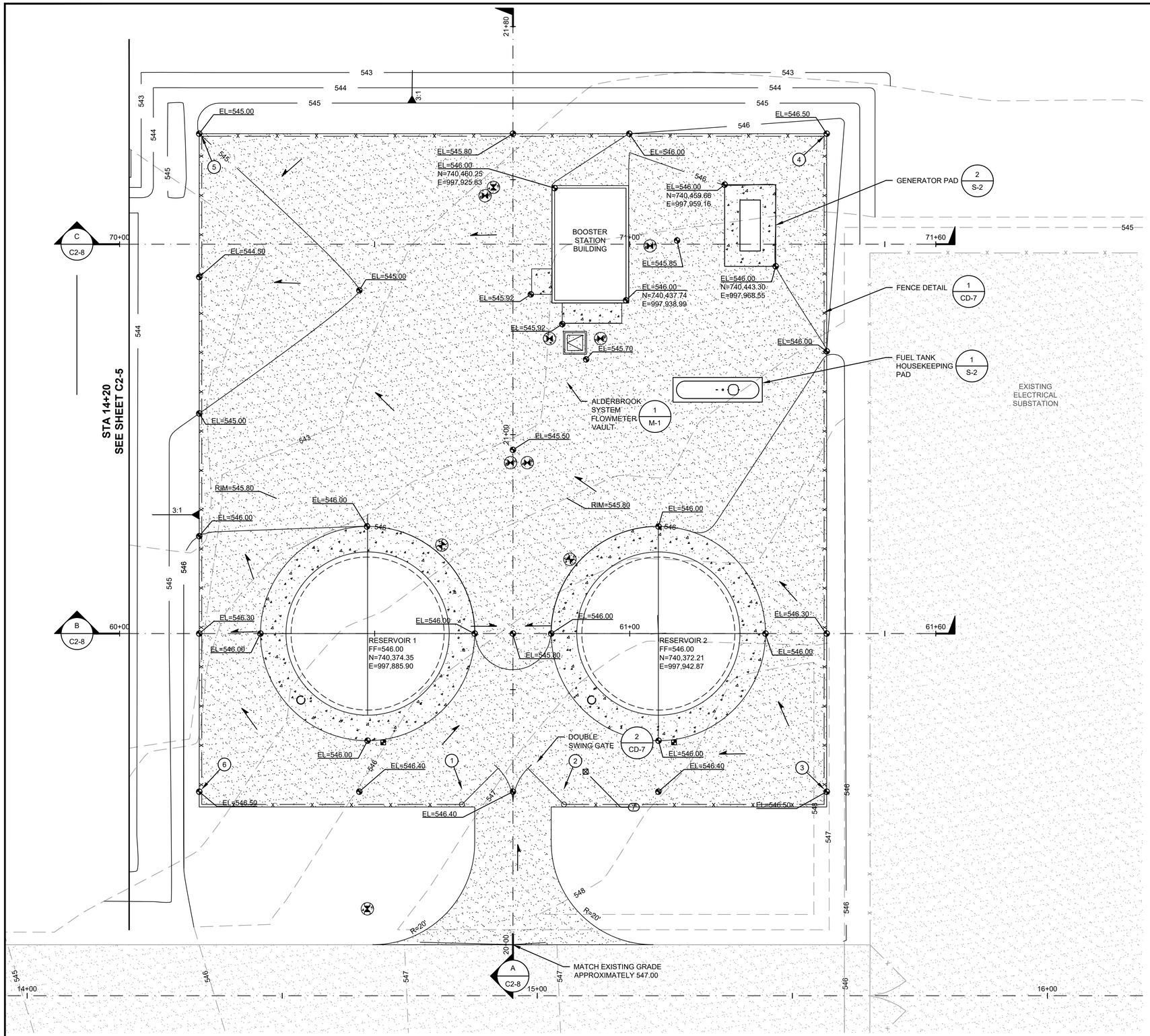

MANZANITA RESERVOIR AND BOOSTER STATION PROPOSED GRADING PLAN

SCALE: 1"=10'

NOTES:

1. NUMERICAL CALL-OUTS REFER TO FINISHED GRADE ELEVATIONS UNLESS OTHERWISE NOTED.
2. SLOPE FINISHED GROUND AWAY FROM ALL STRUCTURES; SLOPE TO DRAIN AT 2% MIN SLOPE.
3. EROSION CONTROL MEASURES SHALL BE INSTALLED PRIOR TO CONSTRUCTION ACTIVITIES. SEE SHEET CD-1 AND CD-2.
4. ALL DISTURBED AREAS NOT SHOWN WITH GRAVEL RESTORATION SHALL BE HYDROSEEDED PER DETAIL 5 ON SHEET CD-3.
5. SEE SPECIFICATION SECTION 01110 FOR CONSTRUCTION TIMING LIMITATIONS.

FENCE SCHEDULE

POINT #	ITEM	NORTHING & EASTING	
1	DOUBLE SWING GATE POST	N=740,343.18	E=997,903.25
2	DOUBLE SWING GATE POST	N=740,342.43	E=997,923.23
3	FENCE CORNER POST	N=740,340.51	E=997,974.19
4	FENCE CORNER POST	N=740,468.42	E=997,979.00
5	FENCE CORNER POST	N=740,473.00	E=997,857.09
6	FENCE CORNER POST	N=740,345.09	E=997,852.28

RIGHT-OF-WAY DISCLAIMER

The right-of-way and/or property lines shown hereon are based on available information, not on a surveyed location and are only approximate.

Gray & Osborne, Inc.
CONSULTING ENGINEERS
2102 CARRIAGE DRIVE SW, BUILDING I
OLYMPIA, WA 98502
(360) 292-7481

MICHAEL B. JOHNSON
STATE OF WASHINGTON
36498
REGISTERED PROFESSIONAL ENGINEER
4/7/25

MASON COUNTY PUD

MASON COUNTY PUD NO. 1
MANZANITA RESERVOIR AND BOOSTER PUMP STATION
1681 E McREAVY RD
UNION, WA

No.	DATE	REVISION

ISSUED FOR:	BID SET
ISSUE DATE:	APRIL 2025
APPROVED BY:	MBJ
CHECKED BY:	SLG
DRAWN BY:	JPW
DESIGNER:	SLG
G & O JOB NO.:	22260.00
FILE:	RSVR_GRADE.DWG

0 1" 2"
TWO INCHES AT FULL SCALE.
IF NOT, SCALE ACCORDINGLY

CIVIL

SCHEDULE A, B
RESERVOIR AND BOOSTER STATION GRADING PLAN

DRAWING: **C2-7** OF: **8**

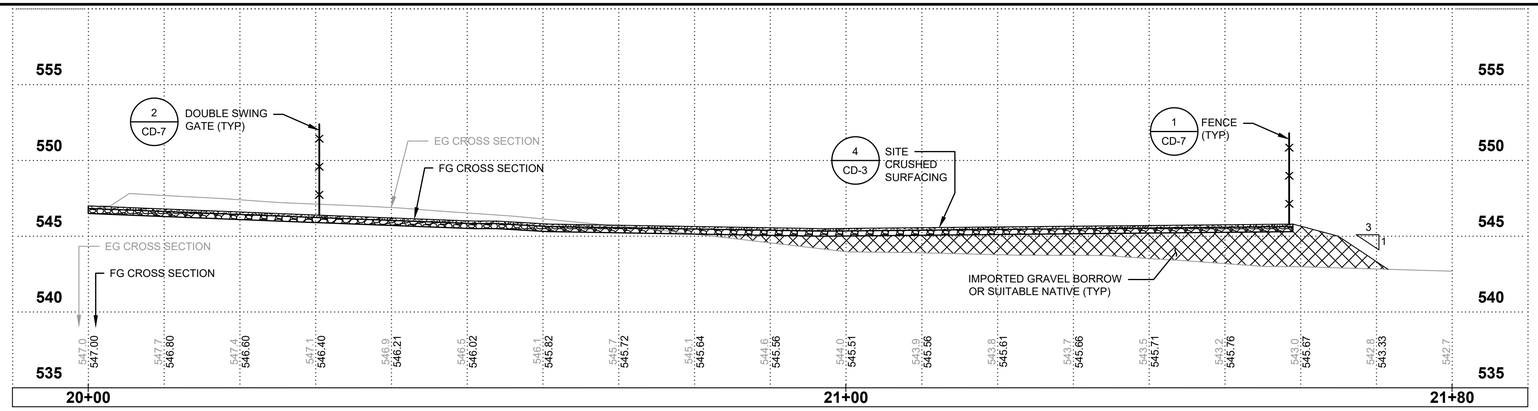

BOOSTER STATION AND RESERVOIR CROSS SECTION

A / C2-7

SCALE H: 1"=10'-0"
V: 1"=5'-0"

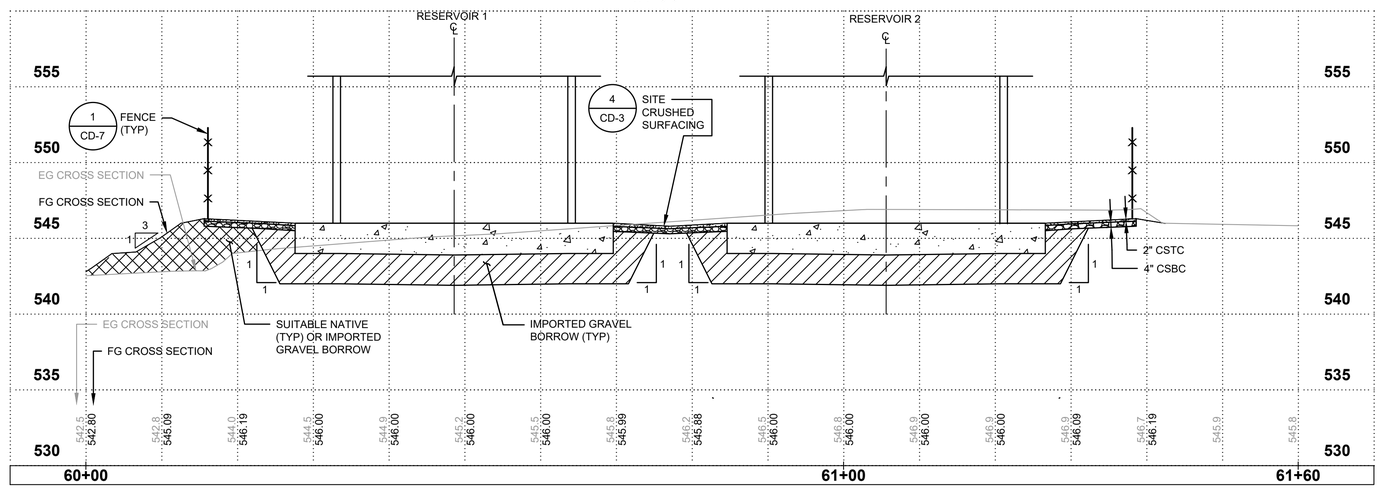

BOOSTER STATION AND RESERVOIR CROSS SECTION

B / C2-7

SCALE H: 1"=10'-0"
V: 1"=5'-0"

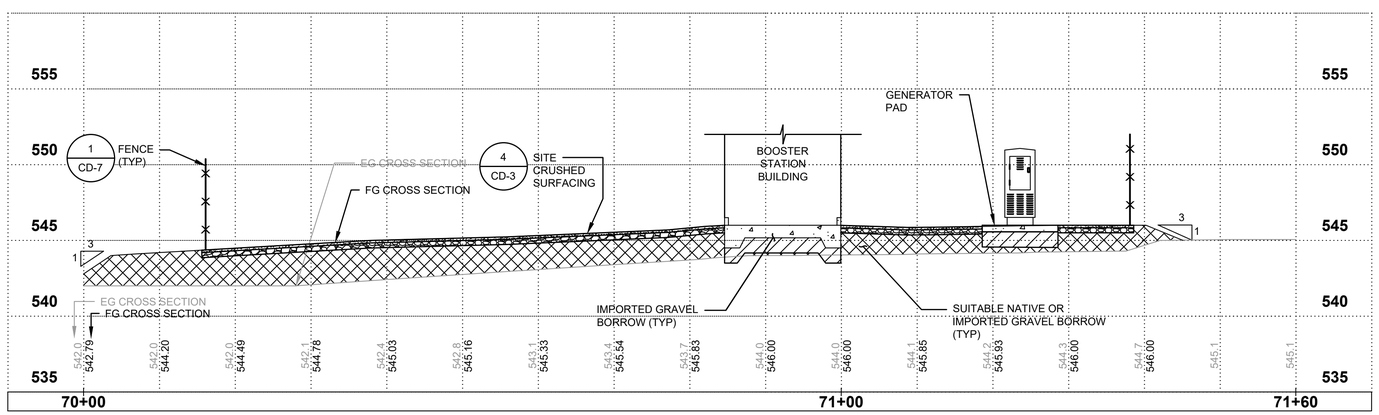

BOOSTER STATION AND RESERVOIR CROSS SECTION

C / C2-7

SCALE H: 1"=10'-0"
V: 1"=5'-0"

Gray & Osborne, Inc.
CONSULTING ENGINEERS
2102 CARRIAGE DRIVE SW, BUILDING I
OLYMPIA, WA 98502
(360) 292-7481

MICHAEL B. JOHNSON
STATE OF WASHINGTON
36498
REGISTERED PROFESSIONAL ENGINEER
4/7/25

MASON COUNTY PUD

MASON COUNTY PUD NO. 1
MANZANITA RESERVOIR AND BOOSTER PUMP STATION
1681 E McREAVY RD
UNION, WA

No.	DATE	REVISION

ISSUED FOR:	BID SET
ISSUE DATE:	APRIL 2025
APPROVED BY:	MBJ
CHECKED BY:	SLG
DRAWN BY:	JPW
DESIGNER:	SLG
G & O JOB NO.:	22260.00
FILE:	RSVR_GRADE.DWG

0 1" 2"
TWO INCHES AT FULL SCALE.
IF NOT, SCALE ACCORDINGLY

CIVIL

SCHEDULE A, B
RESERVOIR AND BOOSTER PUMP PROPOSED GRADING SECTIONS

DRAWING: **C2-8** OF: **8**

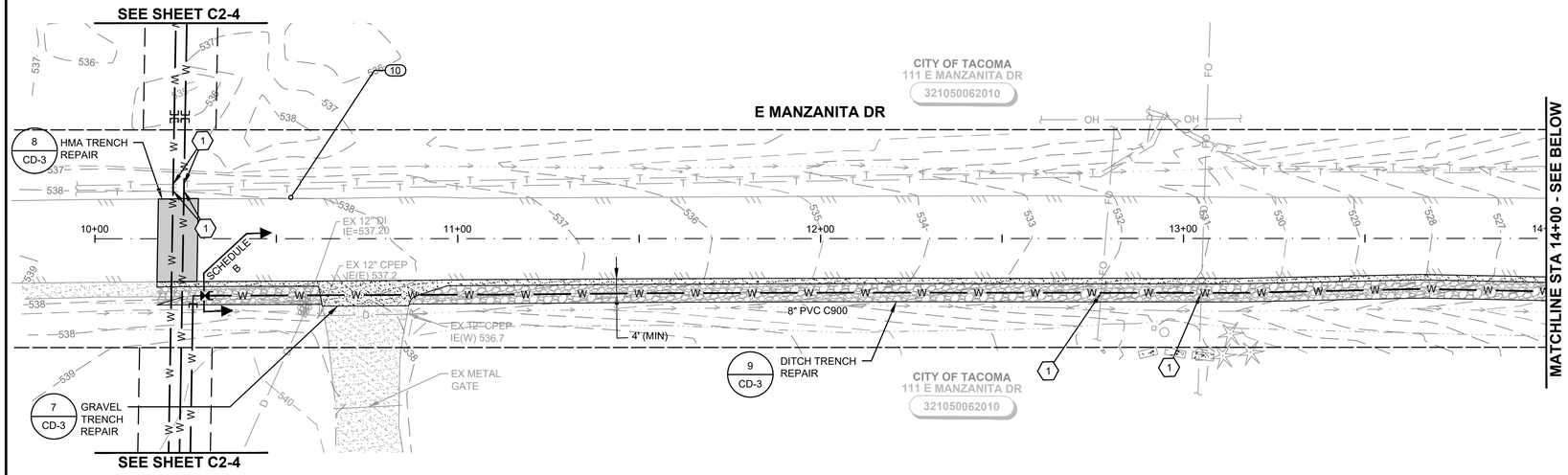

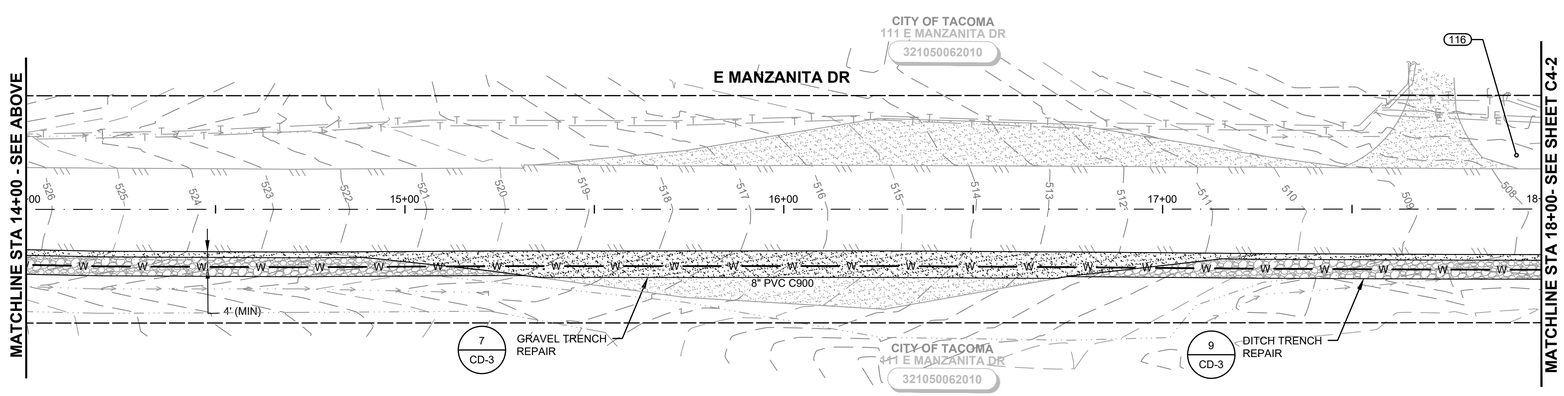

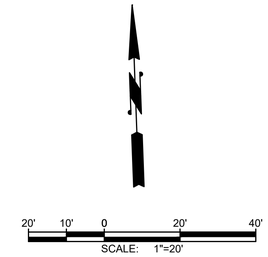

NOTES:

1. SEE SHEET CD-3 FOR TYPICAL PIPE TRENCH SECTION.
2. PIPING BETWEEN POINTS OF INDICATED ELEVATION SHALL BE SET AT A SINGLE UNIFORM GRADE.
3. WHERE PIPES CROSS WITH LESS THAN ONE FOOT CLEARANCE, CDF SHALL BE USED BETWEEN THE PIPES.
4. PRIOR TO SUBSTANTIAL COMPLEATION, THE CONTRACTOR SHALL DISINFECT THE WATER PIPING AND OBTAIN THE SATISFACTORY PRESSURE TEST AND BACTERIOLOGICAL TEST RESULTS.
5. ALL DISTURBED AREAS NOT SHOWN WITH HMA, GRAVEL RESTORATION OR DITCH TRENCH REPAIR, SHALL BE HYDROSEEDED PER DETAIL 5 ON SHEET CD-3.

WATER NOTES:

1. CAUTION: POTENTIAL UTILITY CONFLICT. CONTRACTOR TO FIELD VERIFY EXACT LOCATION AND DEPTH OF EXISTING UTILITY. ANY DAMAGE CAUSED BY THE CONTRACTOR TO THE EXISTING UTILITY SHALL BE FIXED AND/OR REPLACED BY THE CONTRACTOR AT THE CONTRACTOR'S EXPENSE.
2. INSTALL WATER MAIN OVER EXISTING CULVERT.

RIGHT-OF-WAY DISCLAIMER

The right-of-way and/or property lines shown hereon are based on available information, not on a surveyed location and are only approximate.

Gray & Osborne, Inc.
CONSULTING ENGINEERS
2102 CARRIAGE DRIVE SW,
BUILDING I
OLYMPIA, WA 98502
(360) 292-7481

MICHAEL B. JOHNSON
STATE OF WASHINGTON
36498
REGISTERED
PROFESSIONAL ENGINEER
4/7/25

MASON COUNTY PUD

MASON COUNTY PUD NO. 1
MANZANITA RESERVOIR AND BOOSTER PUMP STATION
1681 E McREAVY RD
UNION, WA

No.	DATE	REVISION

ISSUED FOR:	BID SET
ISSUE DATE:	APRIL 2025
APPROVED BY:	MBJ
CHECKED BY:	SLG
DRAWN BY:	JPW
DESIGNER:	SLG
G & O JOB NO.:	22260.00
FILE:	WAT_MAIN-MANZANITA.DWG

0 1" 2"
TWO INCHES AT FULL SCALE.
IF NOT, SCALE ACCORDINGLY

CIVIL

SCHEDULE B
ALDERBROOK SYSTEM WATER MAIN PLAN STA 10+00 TO 18+00

DRAWING: **C4-1** OF: **4**

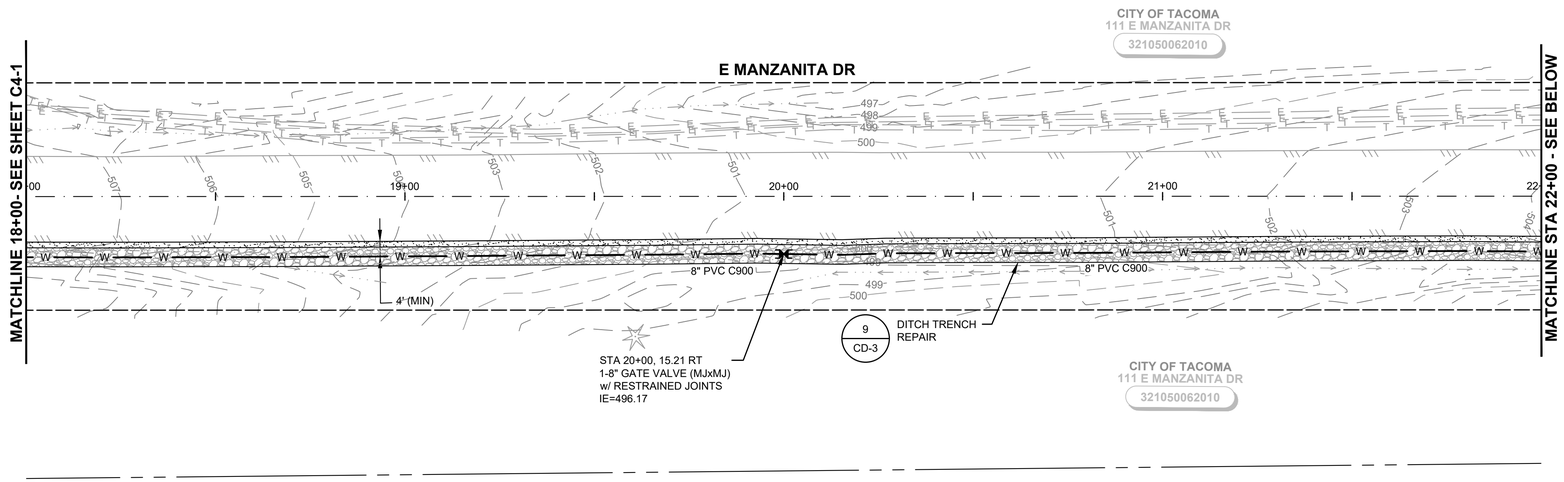

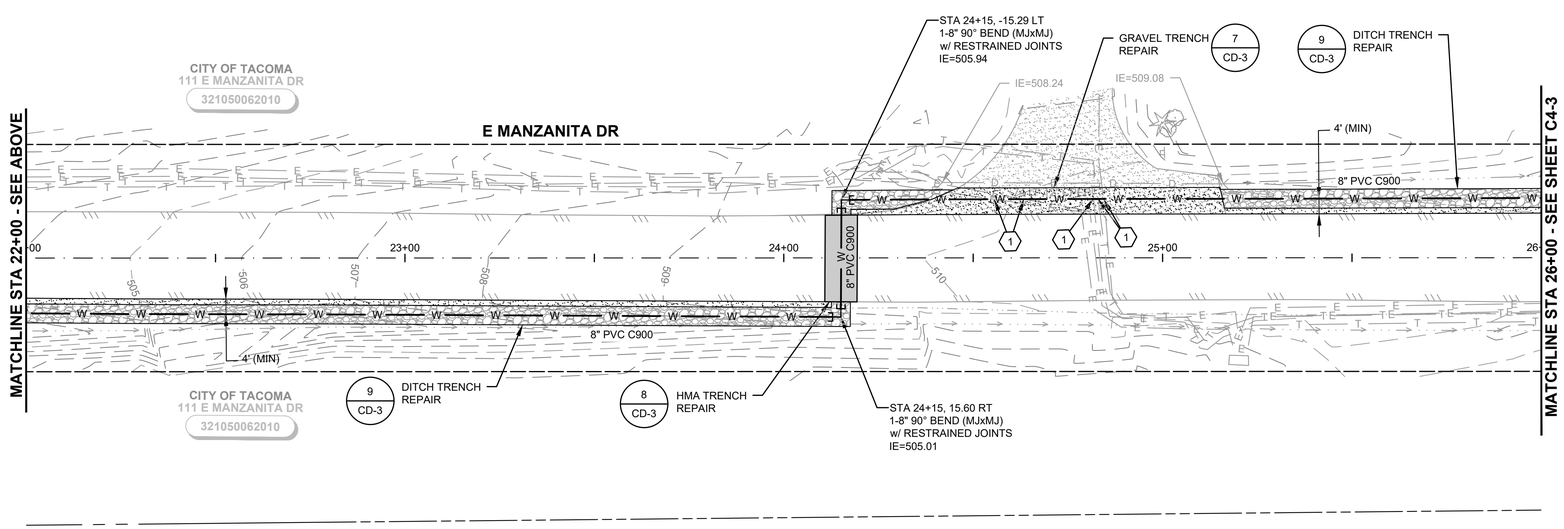

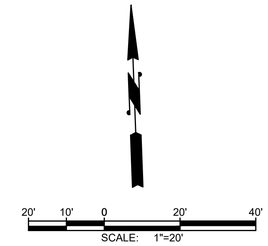

NOTES:

1. SEE SHEET CD-3 FOR TYPICAL PIPE TRENCH SECTION.
2. PIPING BETWEEN POINTS OF INDICATED ELEVATION SHALL BE SET AT A SINGLE UNIFORM GRADE.
3. WHERE PIPES CROSS WITH LESS THAN ONE FOOT CLEARANCE, CDF SHALL BE USED BETWEEN THE PIPES.
4. PRIOR TO SUBSTANTIAL COMPLEATION, THE CONTRACTOR SHALL DISINFECT THE WATER PIPING AND OBTAIN THE SATISFACTORY PRESSURE TEST AND BACTERIOLOGICAL TEST RESULTS.
5. ALL DISTURBED AREAS NOT SHOWN WITH HMA, GRAVEL RESTORATION OR DITCH TRENCH REPAIR, SHALL BE HYDROSEEDED PER DETAIL 5 ON SHEET CD-3.

WATER NOTES:

1. CAUTION: POTENTIAL UTILITY CONFLICT. CONTRACTOR TO FIELD VERIFY EXACT LOCATION AND DEPTH OF EXISTING UTILITY. ANY DAMAGE CAUSED BY THE CONTRACTOR TO THE EXISTING UTILITY SHALL BE FIXED AND/OR REPLACED BY THE CONTRACTOR AT THE CONTRACTOR'S EXPENSE.
2. INSTALL WATER MAIN OVER EXISTING CULVERT.

RIGHT-OF-WAY DISCLAIMER

The right-of-way and/or property lines shown hereon are based on available information, not on a surveyed location and are only approximate.

Gray & Osborne, Inc.
CONSULTING ENGINEERS
2102 CARRIAGE DRIVE SW,
BUILDING I
OLYMPIA, WA 98502
(360) 292-7481

MICHAEL B. JOHNSON
STATE OF WASHINGTON
36498
REGISTERED PROFESSIONAL ENGINEER
4/7/25

MASON COUNTY PUD

MASON COUNTY PUD NO. 1
MANZANITA RESERVOIR AND BOOSTER PUMP STATION
1681 E McREAVY RD
UNION, WA

No.	DATE	REVISION

ISSUED FOR:	BID SET
ISSUE DATE:	APRIL 2025
APPROVED BY:	MBJ
CHECKED BY:	SLG
DRAWN BY:	JPW
DESIGNER:	SLG
G & O JOB NO.:	22260.00
FILE:	WAT_MAIN-MANZANITA.DWG

0 1" 2"
TWO INCHES AT FULL SCALE.
IF NOT, SCALE ACCORDINGLY

CIVIL

SCHEDULE B
ALDERBROOK SYSTEM WATER MAIN PLAN STA 18+00 TO 26+00

DRAWING: **C4-2** OF: **4**

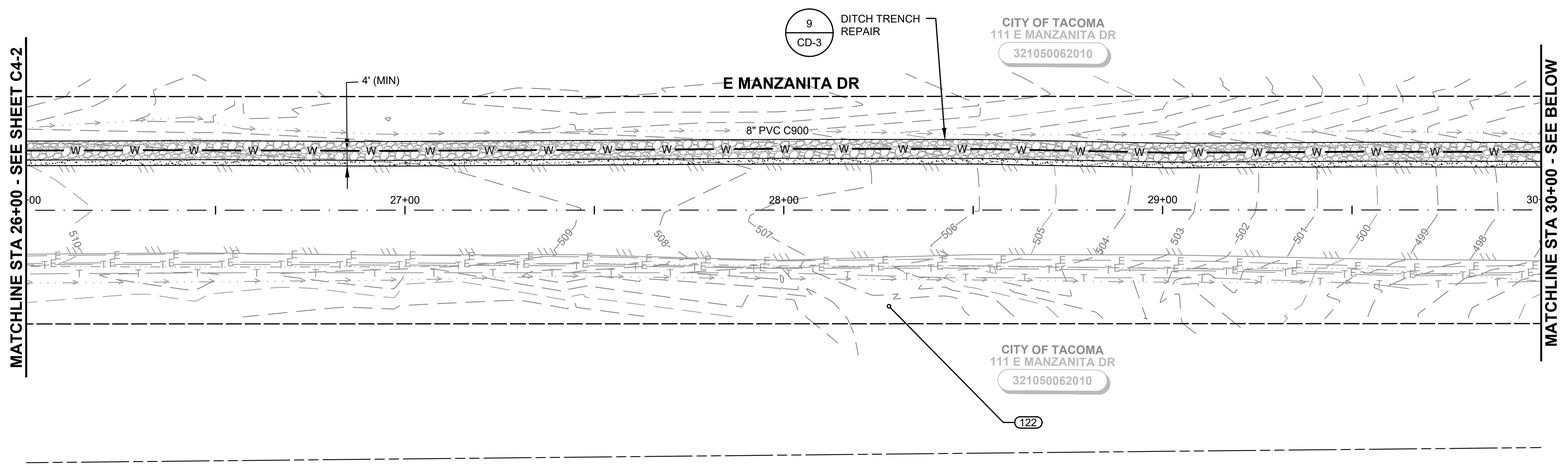

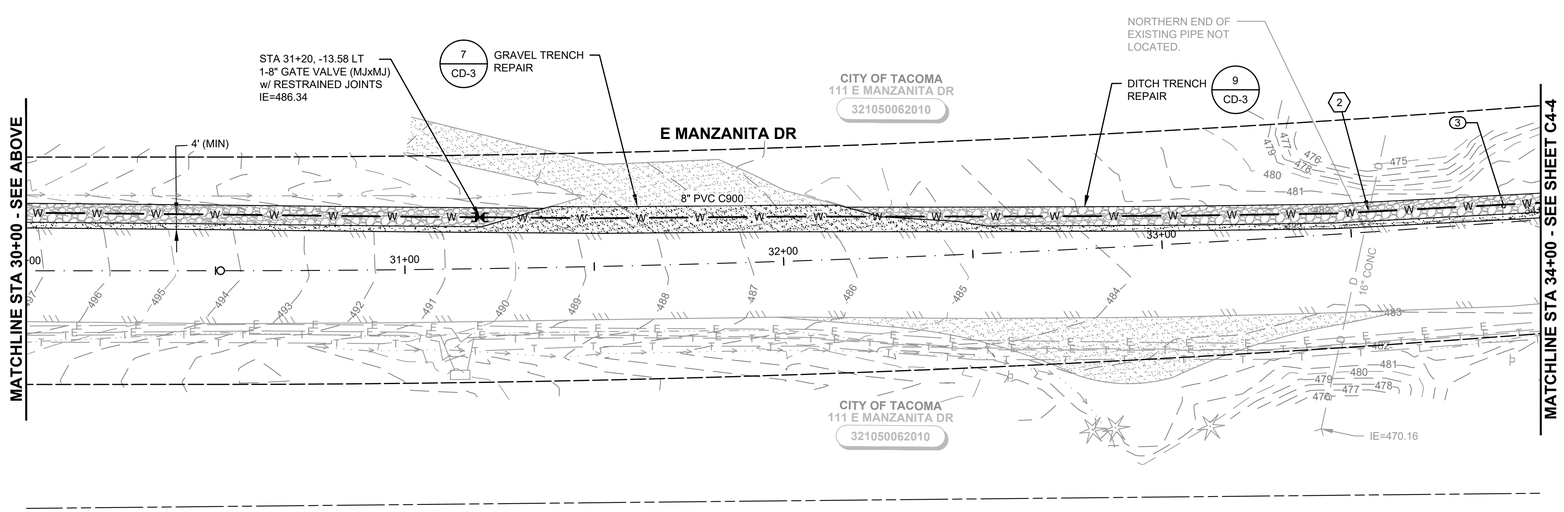

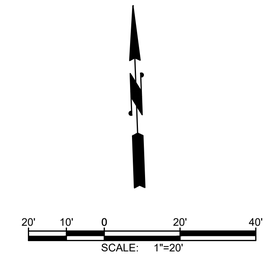

NOTES:

1. SEE SHEET CD-3 FOR TYPICAL PIPE TRENCH SECTION.
2. PIPING BETWEEN POINTS OF INDICATED ELEVATION SHALL BE SET AT A SINGLE UNIFORM GRADE.
3. WHERE PIPES CROSS WITH LESS THAN ONE FOOT CLEARANCE, CDF SHALL BE USED BETWEEN THE PIPES.
4. PRIOR TO SUBSTANTIAL COMPLEATION, THE CONTRACTOR SHALL DISINFECT THE WATER PIPING AND OBTAIN THE SATISFACTORY PRESSURE TEST AND BACTERIOLOGICAL TEST RESULTS.
5. ALL DISTURBED AREAS NOT SHOWN WITH HMA, GRAVEL RESTORATION OR DITCH TRENCH REPAIR, SHALL BE HYDROSEEDED PER DETAIL 5 ON SHEET CD-3.

WATER NOTES:

1. CAUTION: POTENTIAL UTILITY CONFLICT. CONTRACTOR TO FIELD VERIFY EXACT LOCATION AND DEPTH OF EXISTING UTILITY. ANY DAMAGE CAUSED BY THE CONTRACTOR TO THE EXISTING UTILITY SHALL BE FIXED AND/OR REPLACED BY THE CONTRACTOR AT THE CONTRACTOR'S EXPENSE.
2. INSTALL WATER MAIN OVER EXISTING CULVERT.

RIGHT-OF-WAY DISCLAIMER

The right-of-way and/or property lines shown hereon are based on available information, not on a surveyed location and are only approximate.

Gray & Osborne, Inc.
CONSULTING ENGINEERS
2102 CARRIAGE DRIVE SW,
BUILDING I
OLYMPIA, WA 98502
(360) 292-7481

MICHAEL B. JOHNSON
STATE OF WASHINGTON
36498
REGISTERED PROFESSIONAL ENGINEER
4/7/25

MASON COUNTY PUD

MASON COUNTY PUD NO. 1
MANZANITA RESERVOIR AND BOOSTER PUMP STATION
1681 E McREAVY RD
UNION, WA

No.	DATE	REVISION

ISSUED FOR:	BID SET
ISSUE DATE:	APRIL 2025
APPROVED BY:	MBJ
CHECKED BY:	SLG
DRAWN BY:	JPW
DESIGNER:	SLG
G & O JOB NO.:	22260.00
FILE:	WAT_MAIN-MANZANITA.DWG

0 1" 2"
TWO INCHES AT FULL SCALE.
IF NOT, SCALE ACCORDINGLY

CIVIL

SCHEDULE B
ALDERBROOK SYSTEM WATER MAIN PLAN
STA 26+00 TO 34+00

DRAWING: **C4-3** OF: **4**

NOTES:

1. SEE SHEET CD-3 FOR TYPICAL PIPE TRENCH SECTION.
2. PIPING BETWEEN POINTS OF INDICATED ELEVATION SHALL BE SET AT A SINGLE UNIFORM GRADE.
3. WHERE PIPES CROSS WITH LESS THAN ONE FOOT CLEARANCE, CDF SHALL BE USED BETWEEN THE PIPES.
4. PRIOR TO SUBSTANTIAL COMPLEATION, THE CONTRACTOR SHALL DISINFECT THE WATER PIPING AND OBTAIN THE SATISFACTORY PRESSURE TEST AND BACTERIOLOGICAL TEST RESULTS.
5. ALL DISTURBED AREAS NOT SHOWN WITH HMA, GRAVEL RESTORATION OR DITCH TRENCH REPAIR, SHALL BE HYDROSEEDED PER DETAIL 5 ON SHEET CD-3.

WATER NOTES:

1. CAUTION: POTENTIAL UTILITY CONFLICT. CONTRACTOR TO FIELD VERIFY EXACT LOCATION AND DEPTH OF EXISTING UTILITY. ANY DAMAGE CAUSED BY THE CONTRACTOR TO THE EXISTING UTILITY SHALL BE FIXED AND/OR REPLACED BY THE CONTRACTOR AT THE CONTRACTOR'S EXPENSE.
2. INSTALL WATER MAIN OVER EXISTING CULVERT.

20' 10' 0 20' 40'
SCALE: 1"=20'

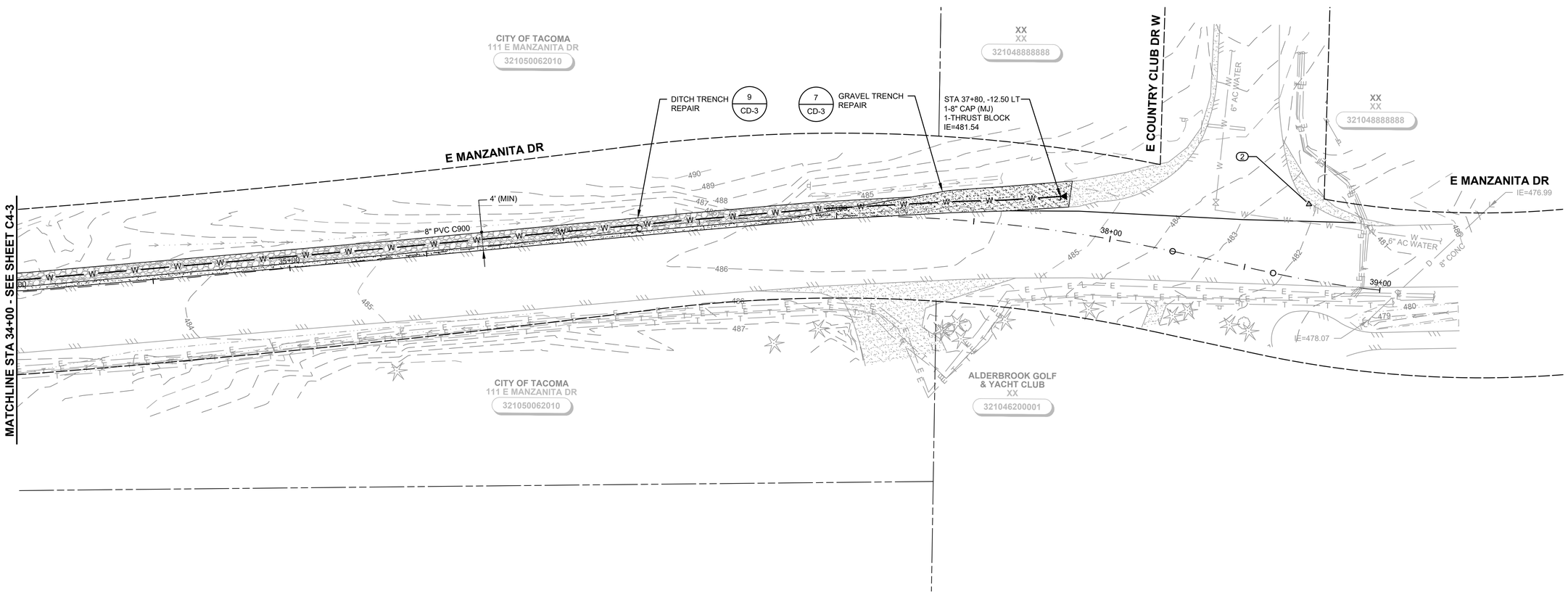

RIGHT-OF-WAY DISCLAIMER

The right-of-way and/or property lines shown hereon are based on available information, not on a surveyed location and are only approximate.

Gray & Osborne, Inc.
CONSULTING ENGINEERS
2102 CARRIAGE DRIVE SW, BUILDING I
OLYMPIA, WA 98502
(360) 292-7481

MICHAEL B. JOHNSON
STATE OF WASHINGTON
36488
REGISTERED PROFESSIONAL ENGINEER
4/7/25

MASON COUNTY PUD

MASON COUNTY PUD NO. 1
MANZANITA RESERVOIR AND BOOSTER PUMP STATION
1681 E McREAVY RD
UNION, WA

No.	DATE	REVISION

ISSUED FOR:	BID SET
ISSUE DATE:	APRIL 2025
APPROVED BY:	MBJ
CHECKED BY:	SLG
DRAWN BY:	JPW
DESIGNER:	SLG
G & O JOB NO.:	22260.00
FILE:	WAT_MAIN-MANZANITA.DWG

0 1" 2"
TWO INCHES AT FULL SCALE.
IF NOT, SCALE ACCORDINGLY

CIVIL

SCHEDULE B
ALDERBROOK SYSTEM
WATER MAIN PLAN
STA 34+00 TO 39+00

DRAWING: **C4-4** OF: **4**

T.E.S.C. NOTES

GENERAL NOTES FOR TARGETED DRAINAGE PLAN:

1. ALL GRADING SHALL COMPLY WITH PERMIT CONDITIONS, CURRENT MASON COUNTY PUD AND MASON COUNTY CODES AND DEPARTMENT OF ECOLOGY REQUIREMENTS, AND STATE (WSDOT) STANDARD SPECIFICATIONS, CURRENT EDITION.

2. IT SHALL BE THE OBLIGATION AND RESPONSIBILITY OF THE CONTRACTOR TO ADDRESS ANY NEW CONDITIONS THAT MAY BE CREATED BY THE CONTRACTOR'S ACTIVITIES AND TO PROVIDE ADDITIONAL FACILITIES THAT MAY BE NEEDED TO PROTECT THE NATURAL FEATURES OR ADJACENT PROPERTIES.

3. THE TEMPORARY EROSION/SEDIMENTATION CONTROL FACILITIES SHALL BE CONSTRUCTED PRIOR TO ANY GRADING OR SITE WORK. THESE FACILITIES MUST BE SATISFACTORILY MAINTAINED UNTIL CONSTRUCTION AND LANDSCAPING IS COMPLETED AND WITHIN 30 DAYS OF FINAL SITE STABILIZATION OR UNTIL THE POTENTIAL FOR ON-SITE EROSION HAS PASSED.

4. ALL PERSONS ENGAGING IN CONSTRUCTION ACTIVITIES SHALL PREVENT OR MINIMIZE EROSION AND SEDIMENTATION ON-SITE, AND SHALL PROTECT PROPERTIES AND WATER COURSES DOWNSTREAM FROM THE SITE.

5. NON COMPLIANCE WITH THE EROSION CONTROL REQUIREMENTS, WATER QUALITY REQUIREMENTS AND/OR CLEARING LIMITS MAY RESULT IN REVOCATION OF PROJECT PERMITS, REVOCATION OF PLAN APPROVAL, AND BOND FORECLOSURES.

6. PRIOR TO INITIATION OF SITE WORK, HIGHLY VISIBLE MARKERS SUCH AS ORANGE BARRIER FENCING OR FLAGGING SHALL BE USED TO IDENTIFY CLEARING LIMITS AND EXISTING NGPA AREAS.

7. ALL STREETS SHALL BE KEPT CLEAR OF DIRT AND DEBRIS DURING EXCAVATION AND FILL OPERATIONS. SWEEP STREETS IMMEDIATELY WHEN DIRT HAS BEEN TRACKED ONTO PAVED SURFACES.

8. STOCKPILES ARE TO BE LOCATED IN SAFE AREAS AND ADEQUATELY PROTECTED WITHIN 24 HOURS OF FORMATION TO PREVENT SOIL LOSS.

9. STORM SEWER INLETS RECEIVING SITE STORM WATER RUNOFF DURING CONSTRUCTION SHALL BE PROTECTED SO THAT WATER WILL NOT ENTER THE INLET WITHOUT FIRST BEING FILTERED OR OTHERWISE TREATED TO MINIMIZE THE AMOUNT OF SEDIMENT ENTERING THE INLET.

10. FROM MAY 1 TO SEPTEMBER 30, NO SOIL SHALL REMAIN EXPOSED FOR MORE THAN 7 DAYS. DENUDED AREAS SHALL BE COVERED BY MULCH, SOD, PLASTIC OR EQUIVALENT BMP LISTED IN THE WASHINGTON STATE DEPARTMENT OF ECOLOGY STORMWATER MANAGEMENT MANUAL FOR WESTERN WASHINGTON FROM OCTOBER 1 TO APRIL 30. NO SOIL SHALL REMAIN EXPOSED FOR MORE THAN 2 DAYS. SEE WET SEASON SUPPLEMENTAL GRADING NOTES FOR ADDITIONAL BMP REQUIREMENTS.

11. WATER RESULTING FROM THE DEWATERING OF TRENCHES AND EXCAVATIONS SHALL BE FILTERED PRIOR TO DISCHARGE AS REQUIRED TO MEET TURBIDITY PERMITS. DISCHARGE OF SURFACE WATER FROM THE SITE SHALL BE SUBJECT TO MONITORING BY THE OWNER, AND TREATMENT AND/OR DIVERSION TO THE SANITARY SEWER SYSTEM WHERE APPROPRIATE, IN ACCORDANCE WITH THESE PLANS AND PROJECT SPECIFICATIONS. MAXIMUM ALLOWABLE TURBIDITY SHALL BE 5 NTU OVER BACKGROUND. DIVERSION OF STORM WATER DISCHARGE TO THE SANITARY SEWER SYSTEM SHALL BE SUBJECT TO OWNERS APPROVAL AND TO ANY PRE-TREATMENT REQUIREMENTS IMPOSED BY THE OWNER.

12. CONTRACTOR IS RESPONSIBLE FOR PREVENTING SURFACE WATER FROM RUNNING INTO EXCAVATIONS AND/OR PUMPING SURFACE RUN-OFF FROM EXCAVATION AND WORK AREA AS NEEDED.

13. FILTER FABRIC FENCE AND ALL OTHER TESC MEASURES SHALL BE CHECKED IMMEDIATELY AFTER EACH RAINFALL EVENT IN EXCESS OF 0.1 INCH AND DAILY DURING PROLONGED RAIN EVENTS. MAINTENANCE AND REPAIR OF TESC FACILITIES AND STRUCTURES SHALL BE CONDUCTED IMMEDIATELY UPON RECOGNITION OF A PROBLEM OR DAMAGE. SEE ALSO NOTES ON SILTATION BARRIER MAINTENANCE, THIS SHEET.

14. SEDIMENT DEPOSITS SHALL BE REMOVED FROM ALL TEMPORARY DRAINAGE FACILITIES AND STRUCTURES UPON REACHING A DEPTH OF 6 INCHES.

15. SUFFICIENT TEST BMP MATERIALS AND SUPPLIES TO PROTECT THE ENTIRE SITE SHALL BE STOCK PILED ON SITE.

16. CONSTRUCTION ACCEPTANCE WILL BE SUBJECT TO PLACEMENT OF STRAW OR WOOD FIBER MULCH OR EROSION CONTROL BLANKETS THAT FULFILLS THE REQUIREMENT OF THE APPROVED CONSTRUCTION PLANS AND MASON COUNTY DRAINAGE STANDARDS.

17. IMMEDIATELY FOLLOWING FINISH GRADING, PERMANENT VEGETATION SHALL BE APPLIED. ALL DISTURBED AREAS NOT DESIGNATED FOR OTHER SURFACE RESTORATION SHALL BE MULCHED WITH STRAW OR WOOD FIBER MATERIAL.

18. IF REQUIRED, SURFACE RUNOFF CONTROL MEASURES SUCH AS GRADIENT TERRACES, INTERCEPTOR DIKE/SWALES, LEVEL SPREADERS, AND SEDIMENT BASINS SHALL BE INSTALLED PRIOR TO MULCHING.

19. TRANSPORT ALL EXCAVATED MATERIALS OFF SITE TO APPROVED STORAGE LOCATION, EXCEPT AS ALLOWED IN THE SPECIFICATIONS. LIMIT TRUCK ACTIVITY TO PAVED AND GRAVELED SURFACES ONLY. MAINTAIN TRUCK ACCESS AREAS WHERE CLEAR OF DIRT AND SEDIMENT DURING PERIODS OF TRUCK ACTIVITY BY SWEEPING.

20. ADDITIONAL REQUIREMENTS FOR UTILITIES. THE INSTALLATION OF UNDERGROUND UTILITY LINES SHALL BE SUBJECT TO THE FOLLOWING ADDITIONAL REQUIRMENTS:

    a. NO MORE THAN FIVE HUNDRED (300) FEET OF TRENCH MAY REMAIN OPEN AT ONE TIME;

    b. EXCAVATED MATERIAL SHALL BE PLACED ON THE UPHILL SIDE OF THE TRENCHES UNLESS INCONSISTENT WITH SAFETY OR SITE CONSTRAINTS

CONSTRUCTION SEQUENCE:

1. ATTEND PRE-CONSTRUCTION MEETING.

2. FLAG OR FENCE CLEARING LIMITS.

3. INSTALL PERIMETER PROTECTION (SILT FENCE, BRUSH BARRIER, ETC.)

4. CONSTRUCT SURFACE WATER CONTROLS IF NEEDED (INTERCEPTOR DIKES, STRAW WATTLES, ETC.) SIMULTANEOUSLY WITH CLEARING AND GRADING FOR WATER MAIN CONSTRUCTION.

5. MAINTAIN EROSION CONTROL MEASURES IN ACCORDANCE WITH COUNTY REQUIREMENTS AND MANUFACTURER'S RECOMMENDATIONS.

6. RELOCATE SURFACE WATER CONTROLS OR EROSION CONTROL MEASURES, OR INSTALL NEW MEASURES SO THAT AS SITE CONDITIONS CHANGE, THE EROSION AND SEDIMENT CONTROL IS ALWAYS IN ACCORDANCE WITH COUNTY REQUIREMENTS.

7. COVER ALL AREAS THAT WILL BE UNWORKED FOR MORE THAN TWO DAYS BETWEEN OCTOBER 1ST AND APRIL 30TH OR SEVEN DAYS BETWEEN MAY 1ST AND SEPTEMBER 30TH WITH STRAW, WOOD FIBER MULCH, COMPOST, PLASTIC SHEETING OR EQUIVALENT.

8. STABILIZE ALL AREAS WITHIN SEVEN DAYS OF REACHING FINAL GRADE.

9. PLACE STRAW OR FIBER MULCH ON ANY AREAS TO REMAIN UNWORKED FOR MORE THAN 30 DAYS.

10. UPON COMPLETION OF THE PROJECT, STABILIZE ALL DISTURBED AREAS AND REMOVE BMPS WHEN APPROPRIATE.

WET SEASON SUPPLEMENTAL GRADING NOTES (OCTOBER 1 THROUGH APRIL 30)

1. CONSTRUCTION SEQUENCE SHALL BE MODIFIED TO MINIMIZE THE AREA OF UNSTABILIZED SOIL, WITH A MAXIMUM OF 1,000 SQUARE FEET EXPOSED AT ANY TIME.

2. EARTHEN AREAS WITH THE POTENTIAL TO CONTRIBUTE SEDIMENTS DURING STORM EVENTS AND WHERE EARTH MOVEMENT IS NOT ANTICIPATED WITHIN 48-HOURS SHALL BE STABILIZED USING ONE OR MORE OF THE FOLLOWING BMPS INSTALLED IN ACCORDANCE WITH THE CURRENT MASON COUNTY DRAINAGE MANUAL: STRAW MULCH OF 4" THICKNESS, PLASTIC SHEETING, EROSION CONTROL BLANKETS.

3. WET SEASON TEST MEASURES SHALL BE EXPANDED TO INCLUDE:

    a. IMPLEMENT A PLAN TO PUMP TURBID WATER TO THE SANITARY SEWER SYSTEM OR TO PUMP TO ON SITE TANKS AND TREAT PRIOR TO DISCHARGE TO THE STORM SYSTEM. THE PLAN SHALL BE PRE-APPROVED BY THE OWNER PRIOR TO START OF WET SEASON GRADING AND SHALL BE SUBJECT TO MONITORING BY THE OWNER AS DESCRIBED IN THE SPECIFICATIONS. PUMPING TO THE SANITARY SEWER SYSTEM SHALL REQUIRE OWNERS APPROVAL AND SHALL BE SUBJECT TO SUCH CONDITIONS AS THE OWNER MAY IMPOSE, AS DESCRIBED IN THE SPECIFICATIONS.

    b. STOCKPILE BUILDING MATERIALS ON PAVED AND/OR GRAVELED SURFACES TO MINIMIZE TRAFFIC ON ERODABLE SURFACES.

4. SOILS SHALL NOT BE DISTURBED EXCEPT FOR CONSTRUCTION ACTIVITIES. PARKING IS ALLOWED ONLY ON PAVED AND/OR GRAVELED SURFACES.

5. SLOPES WITHOUT ESTABLISHED GROUND COVER SHALL BE STABILIZED WITH PLASTIC SHEETING, 6 MIL. MINIMUM. SHEETING SHALL BE ANCHORED WITH SANDBAGS LOCATED 5 FEET APART ON THE PERIMETER AND 10 FEET ON CENTER ELSEWHERE ON THE SHEETING. A MINIMUM OF 2 FEET OVERLAP IS REQUIRED FOR OVERLAPPING SHEETS.

6. WHEN RAINFALL IS HEAVY (DEFINED AS SUFFICIENT TO PRODUCE SEDIMENT RUNOFF FROM EXPOSED DIRT), ALL EXPOSED EARTHWORK SHALL BE COVERED. NO OTHER CONSTRUCTION ACTIVITY SHALL OCCUR ON PERVIOUS SURFACES DURING THESE PERIODS OF HEAVY RAINFALL.

7. ALL DRAINAGE SWALES AND AREAS WITH 2:1 OR GREATER SLOPES SHALL BE LINED WITH STAKED EROSION CONTROL BLANKETS.

CLEAR PLASTIC COVERINGS:

1. CLEAR PLASTIC COVERINGS SHALL HAVE A MINIMUM THICKNESS OF 6 MIL AND MEET THE REQUIREMENTS OF WSDOT/APWA SECTION 9-14.5.

2. COVERING SHALL BE INSTALLED AND MAINTAINED TIGHTLY IN PLACE BY USING SANDBAGS OR TIRES OR ROPES WITH A MAXIMUM 10 FOOT GRID SPACING IN ALL DIRECTIONS. ALL SEAMS SHALL BE TAPED OR WEIGHTED DOWN FULL LENGTH AND THERE SHALL BE AT LEAST A 1 TO 2 FOOT OVERLAP OF ALL SEAMS. SEAMS SHOULD THEN BE ROLLED AND STAKED OR TIED.

3. WHEN THE COVERING IS USED ON BARE SOIL SLOPES, IT SHALL BE LEFT IN PLACE UNTIL STRAW OR WOOD FIBER MULCH IS APPLIED.

4. SHEETING SHOULD BE TOED IN AT THE TOP OF THE SLOPE TO PREVENT SURFACE FLOW BENEATH THE PLASTIC.

5. SHEETING SHOULD BE REMOVED AS SOON AS IS POSSIBLE TO PREVENT BURNING THE VEGETATION.

6. CHECK SHEETING REGULARLY FOR RIPS AND PLACES WHERE THE PLASTIC MAY BE DISLODGED. CONTACT BETWEEN THE PLASTIC AND THE GROUND SHOULD ALWAYS BE MAINTAINED. ANY AIR BUBBLES FOUND SHOULD BE REMOVED IMMEDIATELY OR THE PLASTIC MAY RIP DURING THE NEXT WINDY PERIOD. RE-ANCHOR OR REPLACE THE PLASTIC AS NECESSARY.

FILTER FENCE:

1. THE FILTER FABRIC SHALL BE PURCHASED IN A CONTINUOUS ROLL CUT TO THE LENGTH OF THE BARRIER TO AVOID USE OF JOINTS. WHEN JOINTS ARE NECESSARY, FILTER CLOTH SHALL BE SPLICED TOGETHER ONLY AT A SUPPORT POST, WITH A MINIMUM 6 INCH OVERLAP, AND BOTH ENDS SECURELY FASTENED TO THE POST.

2. POSTS SHALL BE SPACED A MAXIMUM OF 6 FEET APART AND DRIVEN SECURELY INTO THE GROUND A MINIMUM OF 30 INCHES (WHERE PHYSICALLY POSSIBLE).

3. A TRENCH SHALL BE EXCAVATED APPROXIMATELY 8 INCHES WIDE AND 8 INCHES DEEP ALONG THE LINE OF POSTS AND UPSLOPE FROM THE BARRIER. THE TRENCH SHALL BE CONSTRUCTED TO FOLLOW THE CONTOUR.

4. WHEN SILT FILM FILTER FABRIC IS USED, A WIRE MESH SUPPORT FENCE SHALL BE FASTENED SECURELY TO THE UPSLOPE SIDE OF THE POSTS USING TIE WIRES, HOG RINGS, OR HEAVY-DUTY WIRE STAPLES AT LEAST 1 INCH LONG. THE WIRE SHALL EXTEND INTO THE TRENCH A MINIMUM OF 4 INCHES AND SHALL NOT EXTEND MORE THAN 36 INCHES ABOVE THE ORIGINAL GROUND SURFACE.

5. SILT FILM FILTER FABRIC SHALL BE WIRED TO THE FENCE, AND 20 INCHES OF THE FABRIC SHALL EXTEND INTO THE TRENCH. THE FABRIC SHALL NOT EXTEND MORE THAN 36 INCHES ABOVE THE ORIGINAL GROUND SURFACE. FILTER FABRIC SHALL NOT BE STAPLED TO EXISTING TREES. OTHER TYPES OF FABRIC MAY BE STAPLED TO THE FENCE.

6. WHEN EXTRA-STRENGTH OR MONOFILAMENT FABRIC AND CLOSER POST SPACING ARE USED, THE WIRE MESH SUPPORT FENCE MAY BE ELIMINATED. IN SUCH A CASE, THE FILTER FABRIC IS STAPLED OR WIRED DIRECTLY TO THE POSTS WITH ALL OTHER PROVISIONS OF FILTER FENCE NOTE 5 APPLYING. EXTRA CARE SHOULD BE USED WHEN JOINING OR OVERLAPPING THESE STIFFER FABRICS.

7. THE BASE OF THE SILT FENCE SHALL BE SECURED WITH COMPACTED NATIVE SOIL OR 3/4" MIN DIA WASHED GRAVEL. THE MATERIAL SHALL BE WELL BEDDED TO ENSURE GOOD CONTACT BETWEEN THE FABRIC AND THE TRENCH BOTTOM.

8. FILTER FABRIC FENCES SHALL BE REMOVED WHEN THEY HAVE SERVED THEIR USEFUL PURPOSE, BUT NOT BEFORE THE UPSLOPE AREA HAS BEEN PERMANENTLY STABILIZED. RETAINED SEDIMENT MUST BE REMOVED AND PROPERLY DISPOSED OF AND MULCHED.

FILTER FENCE MAINTENANCE

1. INSPECT IMMEDIATELY AFTER EACH RAINFALL, AND AT LEAST DAILY DURING PROLONGED RAINFALL. REPAIR AS NECESSARY.

2. SEDIMENT MUST BE REMOVED WHEN IT REACHES APPROXIMATELY ONE THIRD THE HEIGHT OF THE FENCE, ESPECIALLY IF HEAVY RAINS ARE EXPECTED.

3. ANY SEDIMENT DEPOSITS REMAINING IN PLACE AFTER THE FILTER FENCE IS NO LONGER REQUIRED SHALL BE DRESSED TO CONFORM WITH THE EXISTING GRADE, PREPARED AND MULCHED.

4. ALL TEMPORARY EROSION AND SEDIMENT CONTROL MEASURES SHALL BE REMOVED WITHIN 30 DAYS AFTER FINAL SITE STABILIZATION IS ACHIEVED OR AFTER THE TEMPORARY "BEST MANAGEMENT PRACTICES" ARE NO LONGER NEEDED. TRAPPED SEDIMENT SHALL BE REMOVED OR STABILIZED ON SITE. DISTURBED SOIL AREAS RESULTING FROM REMOVAL SHALL BE PERMANENTLY STABILIZED.

Gray & Osborne, Inc.
CONSULTING ENGINEERS
2102 CARRIAGE DRIVE SW,
BUILDING I
OLYMPIA, WA 98502
(360) 292-7481

MICHAEL B. JOHNSON
STATE OF WASHINGTON
36498
REGISTERED
PROFESSIONAL ENGINEER
4/7/25

MASON COUNTY PUD

MASON COUNTY PUD NO. 1
MANZANITA RESERVOIR AND BOOSTER PUMP STATION
1681 E McREAVY RD
UNION, WA

No.	DATE	REVISION

ISSUED FOR:	BID SET
ISSUE DATE:	APRIL 2025
APPROVED BY:	MBJ
CHECKED BY:	SLG
DRAWN BY:	JPW
DESIGNER:	SLG
G & O JOB NO.:	22260.00
FILE:	DETAILS.DWG

CIVIL DETAILS

SCHEDULE A, B
TESC NOTES

DRAWING: **CD-1** OF: **7**

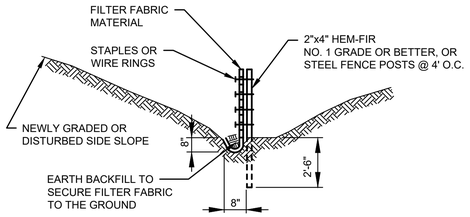

SECTION

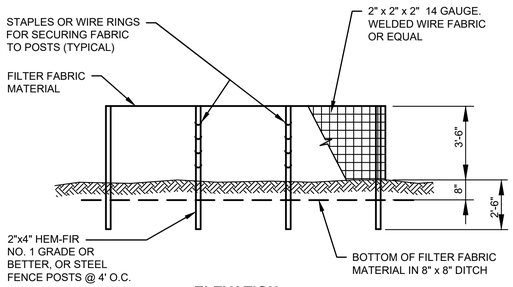

ELEVATION

NOTES:

1. WHERE POSSIBLE, MAINTAIN NATURAL VEGETATION FOR SILT CONTROL
2. TEMPORARY SILTATION CONTROL SHALL BE CONSTRUCTED BY PLACING FILTER FABRIC FENCES ACROSS SWALES UTILIZING FILTER SYSTEM PRIOR TO DISCHARGE
3. BE MAINTAINED IN A SATISFACTORY CONDITION UNTIL SUCH TIME THAT CLEARING AND/OR CONSTRUCTION IS COMPLETED AND SURFACE RESTORATION HAS BEEN COMPLETED
4. RETURN SILTATION CONTROL AREAS TO ORIGINAL GROUND CONDITIONS, UNLESS SPECIFICALLY DIRECTED OTHERWISE BY THE ENGINEER

1 / TYP **SILT FENCE**
NOT TO SCALE

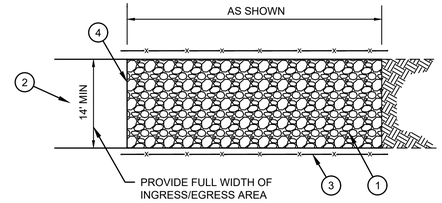

PLAN

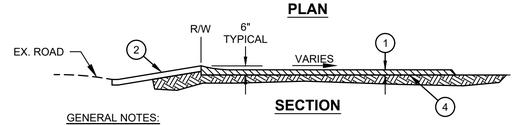

SECTION

DETAIL NOTES:

1. 4" TO 8" QUARRY SPALLS AS SPECIFIED IN SECTION 9-13.6 OF THE WSDOT STANDARD SPECIFICATIONS.
2. ATB DRIVEWAY RAMP, OR SITE ACCESS ROAD. QUARRY SPALL ENTRANCE WIDTH AND LENGTH PER PLAN.
3. INSTALL ORANGE BARRIER FENCE TO DIRECT TRAFFIC ONTO CONSTRUCTION ENTRANCE.
4. FILTER FABRIC (GEOTEXTILE FABRIC) SHALL BE INSTALLED BENEATH THE ENTIRE CONSTRUCTION ENTRANCE AND SHALL CONFORM TO THE FOLLOWING PROPERTIES:

PROPERTY	UNIT	TEST METHOD	RESULT
WEIGHT	OZ/SY	ASTM D3776	2.5 MIN.
THICKNESS	MILS	ASTM D1776	15 MIN.
GRAB STRENGTH	LB	ASTM D1682	100 MIN.
UV RESISTANCE	%	ASTM D1682	90 MIN.
RETENTION EFFICIENCY	%	VIRGINIA DOT VTM-51	75 MIN.
EQUIVALENT SIZE OPENING	U.S. STD. SIEVE	COE CW 02215	20

GENERAL NOTES:

1. INSTALLATION - THE AREA OF THE ENTRANCE SHALL BE CLEARED OF ALL VEGETATION, ROOTS AND OTHER OBJECTIONABLE MATERIAL. THE GRAVEL SHALL BE PLACED TO THE SPECIFIED DIMENSIONS. ANY DRAINAGE FACILITIES REQUIRED BECAUSE OF WASHING SHOULD BE CONSTRUCTED ACCORDING TO SPECIFICATIONS IN THE PLAN. IF WASH RACKS ARE USED, THEY SHALL BE INSTALLED ACCORDING TO MANUFACTURER'S SPECIFICATIONS.
2. SURFACE WATER - ALL SURFACE WATER FLOWING OR DIVERTED TOWARD CONSTRUCTION ENTRANCES SHALL BE PIPED ACROSS THE ENTRANCE. IF PIPING IS IMPRACTICAL, A DRIVABLE BERM WITH 5:1 SLOPES WILL BE PERMITTED.
3. MAINTENANCE - THE ENTRANCE SHALL BE MAINTAINED IN A CONDITION WHICH WILL PREVENT TRACKING OR FLOWING OF SEDIMENT ONTO PUBLIC RIGHT-OF-WAY. THIS MAY REQUIRE PERIODIC TOP DRESSING WITH ADDITIONAL STONE AS CONDITIONS DEMAND AND REPAIR AND/OR CLEANOUT OF ANY MEASURES USED TO TRAP SEDIMENT. ALL SEDIMENT SPILLED, DROPPED, WASHED OR TRACKED ONTO PUBLIC RIGHT-OF-WAY MUST BE REMOVED IMMEDIATELY.
4. WHEELS SHALL BE CLEANED TO REMOVE SEDIMENT PRIOR TO ENTRANCE ONTO PUBLIC RIGHT-OF-WAY. WHEN WASHING IS USED, IT SHALL BE DONE ON AN AREA STABILIZED WITH STONE AND WHICH DRAINS INTO AN APPROVED SEDIMENT TRAPPING DEVICE.
5. PERIODIC INSPECTION AND NEEDED MAINTENANCE SHALL BE PROVIDED AFTER EACH RAIN.

2 / C2-1 **CONSTRUCTION ENTRANCE**
NOT TO SCALE

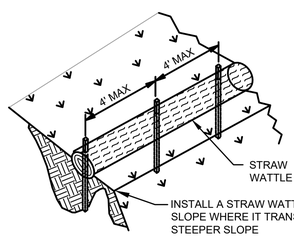

NOTE:

INSTALL WATTLE ROLL ALONG A LEVEL CONTOUR.

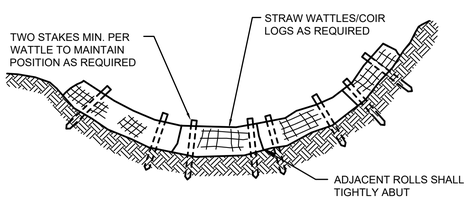

SECTION

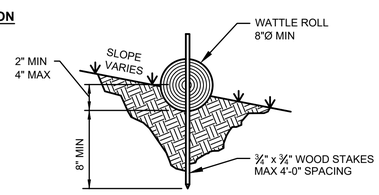

3 / TYP **STRAW WATTLE ROLL DETAIL**
NOT TO SCALE

WET AREA SEED MIX (BELOW PERMANENT POOL)				
TALL OR MEADOW FESCUE	FESTUCA ARUNDINACEA OR FESTUCA ELATIOR	60-70	98	90

BIOSWALE SEED MIX (ABOVE PERMANENT POOL)				
TALL OR MEADOW FESCUE	FESTUCA ARUNDINACEA OR FESTUCA ELATIOR	75-80	98	90

NOTE:

1. SEED EXPOSED EARTH ON THE POND BOTTOM AND INTERIOR SIDE SLOPES WITH AN APPROPRIATE BIOSWALE SEE MIXTURE. PLANT ALL REMAINING AREAS OF THE TRACT WITH GRASS OR LANDSCAPE AND MULCH WITH A 3-INCH COVER OF HOG FUEL OR SHREDDED WOOD MULCH. SHREDDED WOOD MULCH IS MADE FROM SHREDDED TREE TRIMMINGS, USUALLY FROM TREES CLEARED ON SITE. THE MULCH SHOULD BE FREE OF GARBAGE AND WEEDS AND SHOULD NOT CONTAIN EXCESSIVE RESIN, TANNIN OR OTHER MATERIAL DETRIMENTAL TO PLANT GROWTH DO NOT USE CONSTRUCTION MATERIALS, WOOD DEBRIS OR WOOD TREATED WITH PRESERVATIVES FOR PRODUCING SHREDDED WOOD MULCH.

8 / TYP **STORM POND PLANTING RESTORATION**
NOT TO SCALE

Gray & Osborne, Inc.
CONSULTING ENGINEERS
2102 CARRIAGE DRIVE SW, BUILDING I
OLYMPIA, WA 98502
(360) 292-7481

MICHAEL B. JOHNSON — STATE OF WASHINGTON — 36488 — REGISTERED PROFESSIONAL ENGINEER
4/7/25

MASON COUNTY PUD

MASON COUNTY PUD NO. 1
MANZANITA RESERVOIR AND BOOSTER PUMP STATION
1681 E McREAVY RD
UNION, WA

No.	DATE	REVISION

ISSUED FOR:	BID SET
ISSUE DATE:	APRIL 2025
APPROVED BY:	MBJ
CHECKED BY:	SLG
DRAWN BY:	JPW
DESIGNER:	SLG
G & O JOB NO.:	22260.00
FILE:	DETAILS.DWG

CIVIL DETAILS

SCHEDULE A, B
TESC DETAILS

DRAWING: **CD-2** OF: **7**

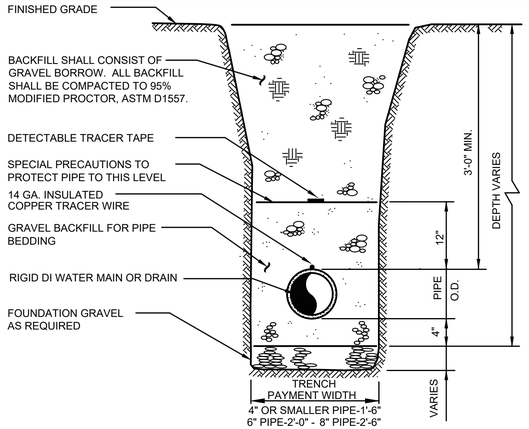

1 TYP **TYPICAL TRENCH SECTION**
NOT TO SCALE

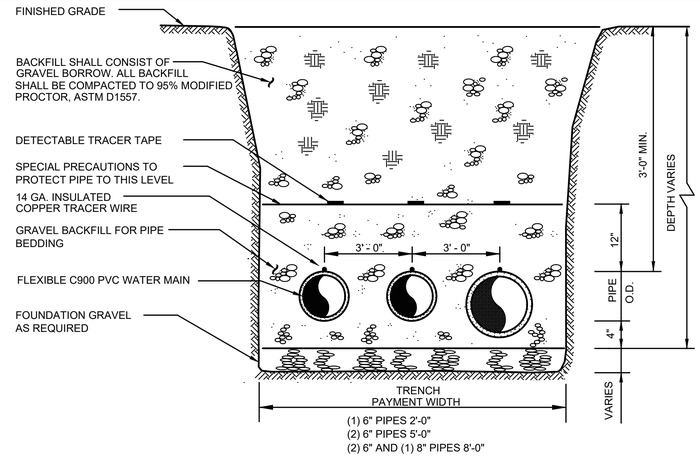

2 TYP **TYPICAL TRENCH SECTION**
NOT TO SCALE

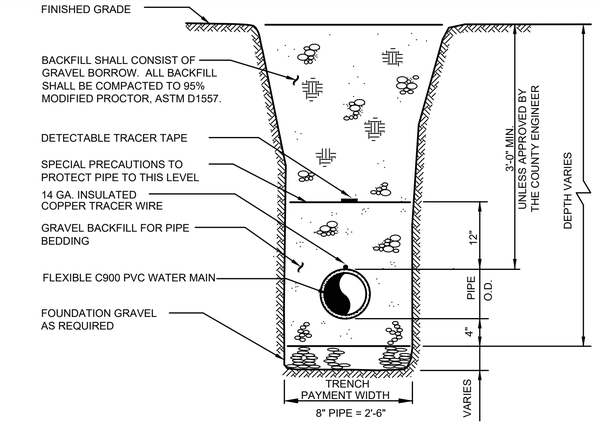

3 TYP **SCHEDULE B TYPICAL TRENCH SECTION**
NOT TO SCALE

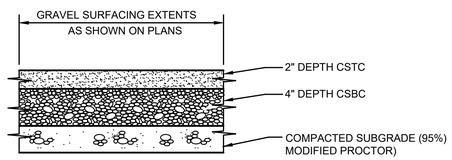

4 TYP **ON-SITE CRUSHED SURFACING**
NOT TO SCALE

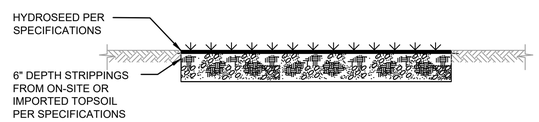

5 TYP **ON-SITE HYDROSEED RESTORATION**
NOT TO SCALE

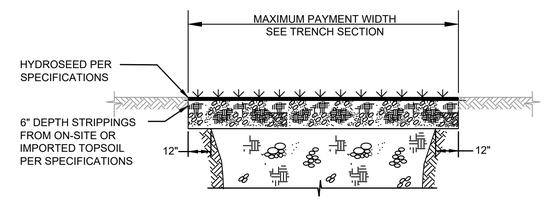

6 TYP **HYDROSEED TRENCH REPAIR**
NOT TO SCALE

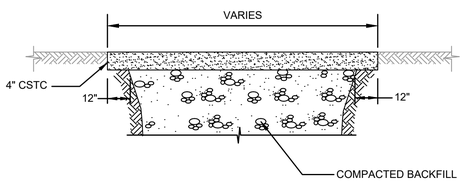

7 TYP **GRAVEL TRENCH REPAIR**
NOT TO SCALE

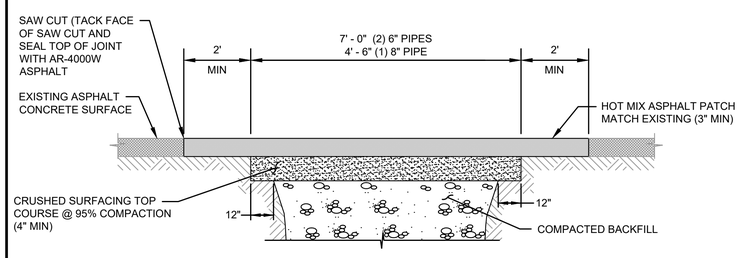

8 TYP **MASON COUNTY HMA TRENCH REPAIR**
NOT TO SCALE

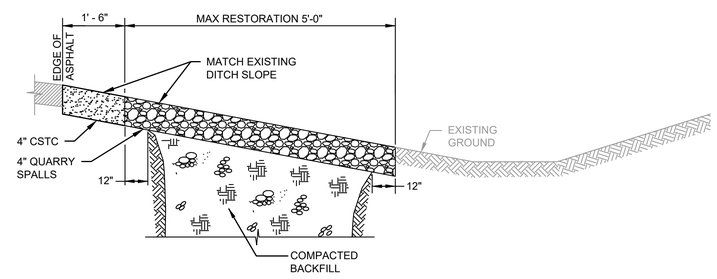

9 TYP **SCHEDULE B DITCH TRENCH REPAIR**
NOT TO SCALE

Gray & Osborne, Inc.
CONSULTING ENGINEERS
2102 CARRIAGE DRIVE SW, BUILDING I
OLYMPIA, WA 98502
(360) 292-7481

MICHAEL B. JOHNSON — STATE OF WASHINGTON — 36498 — REGISTERED PROFESSIONAL ENGINEER
4/7/25

MASON COUNTY PUD

MASON COUNTY PUD NO. 1
MANZANITA RESERVOIR AND BOOSTER PUMP STATION
1681 E McREAVY RD
UNION, WA

No.	DATE	REVISION

ISSUED FOR:	BID SET
ISSUE DATE:	APRIL 2025
APPROVED BY:	MBJ
CHECKED BY:	SLG
DRAWN BY:	JPW
DESIGNER:	SLG
G & O JOB NO.:	22260.00
FILE:	DETAILS.DWG

CIVIL DETAILS

SCHEDULE A, B

TRENCH AND RESTORATION DETAILS

DRAWING: **CD-3** OF: **7**

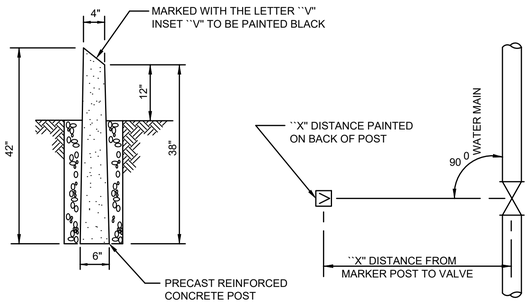

NOTES:

1. PRECAST REINFORCED POST TO BE PAINTED FLAT TRAFFIC YELLOW #2612 OR SAFETY YELLOW #1063.
2. THE DISTANCE FROM THE MARKER POST TO THE WATER MAIN SHALL BE PAINTED ON THE BACKSIDE OF THE MARKER POST IN BLACK WITH A 2" HIGH NUMBER.
3. VALVE MARKER POST SHALL BE REQUIRED WHENEVER THE WATER VALVE IS LOCATED IN AN UNPAVED AREA.
4. THE POST WILL ALSO BE REQUIRED FOR BLOW-OFF IN THE SAME CONDITION AS WATER VALVES.

1 TYP **VALVE MARKER POST**
NOT TO SCALE

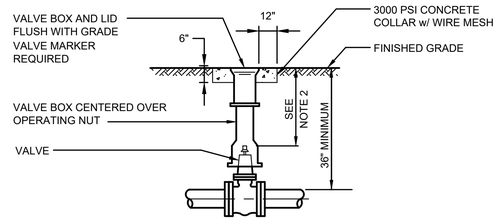

VALVE BOX IN
UNIMPROVED AREA (VALVE MARKER REQUIRED)

NOTES:

1. EACH VALVE SHALL BE PROVIDED WITH AND ADJUSTABLE CAST IRON VALVE BOX OF 5 INCHES (5") INSIDE DIAMETER. VALVE BOXES SHALL HAVE A TOP SECTION WITH AN EIGHTEEN INCH (18") MIN. LENGTH. THE VALVE BOX SHALL BE RICH No. 940 OR EQUAL. VALVE BOX EARS SHALL BE PLACED IN LINE WITH PIPE IT SERVES.
2. 18" MINIMUM, 24" MAXIMUM DEPTH TO OPERATOR NUT PROVIDE EXTENSION IS REQUIRED.

2 TYP **VALVE BOX**
NOT TO SCALE

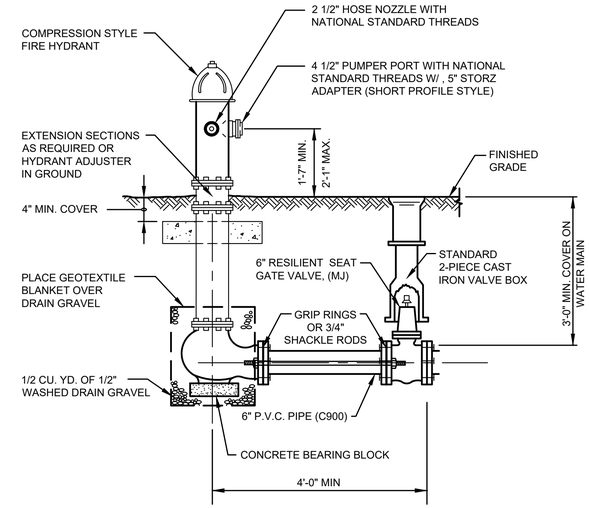

NOTES:

1. PROVIDE MIN. 3'-0" CLEARANCE AND LEVEL AREA AROUND HYDRANT.
2. PAINT FIRE HYDRANT WITH TWO COATS OF YELLOW RUST-RESISTANT PAINT.
3. ACCEPTABLE HYDRANTS: MUELLER CENTURION.

3 TYP **DRAFT HYDRANT DETAIL**
NOT TO SCALE

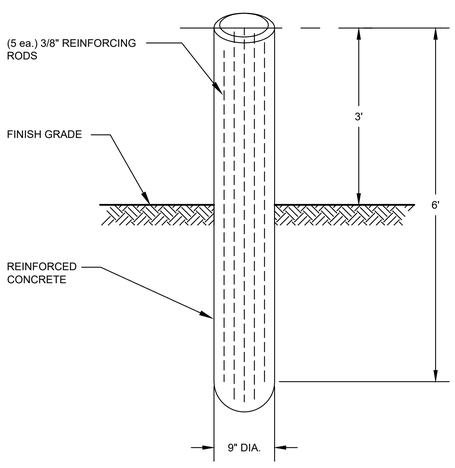

NOTES:

1. HYDRANTS POSTS SHALL CONSIST OF REINFORCED 9" DIA. PRECAST UNIT SPECIFICALLY MANUFACTURED FOR PROTECTION OF HYDRANTS.
2. THE CONFIGURATION OF THE GUARD POST WILL BE 2, 3, OR 4 EACH HYDRANT AND SHALL BE DETERMINED BY THE DISTRICT BASED ON FIELD CONDITIONS.
3. HYDRANT GUARD POSTS SHALL BE PAINTED WITH TWO (2) COATS OF "STEELCOTE FEDERAL YELLOW" PAINT.

4 TYP **HYDRANT GUARD POST**
NOT TO SCALE

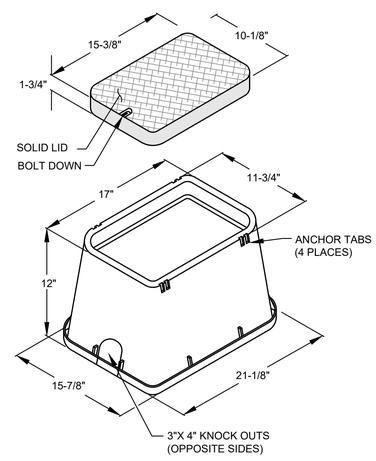

NOTE:

1. CARSON MODEL 1419 W/ METER READING COVER OR EQUAL COVER MUST DISPLAY "W.M." OR EQUAL.

5 TYP **METER BOX**
NOT TO SCALE

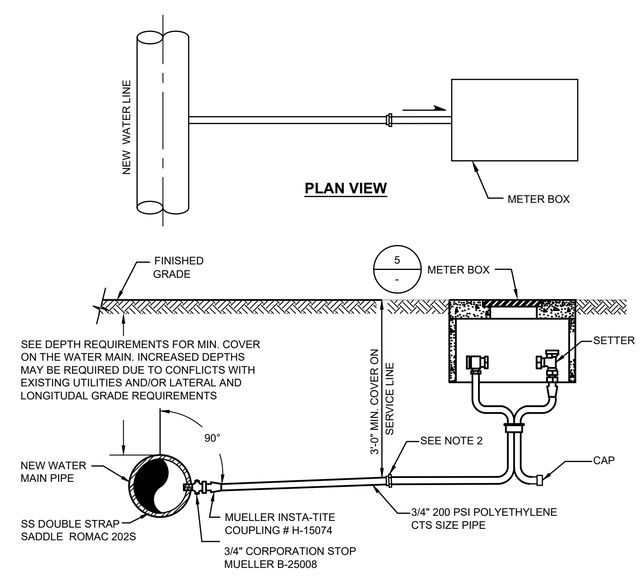

6 TYP **SAMPLE STATION**
NOT TO SCALE

Gray & Osborne, Inc.
CONSULTING ENGINEERS
2102 CARRIAGE DRIVE SW,
BUILDING I
OLYMPIA, WA 98502
(360) 292-7481

MICHAEL B. JOHNSON
STATE OF WASHINGTON
36498
REGISTERED
PROFESSIONAL ENGINEER
4/7/25

MASON COUNTY PUD

MASON COUNTY PUD NO. 1
MANZANITA RESERVOIR AND BOOSTER PUMP STATION
1681 E McREAVY RD
UNION, WA

No.	DATE	REVISION

ISSUED FOR:	BID SET
ISSUE DATE:	APRIL 2025
APPROVED BY:	MBJ
CHECKED BY:	SLG
DRAWN BY:	JPW
DESIGNER:	SLG
G & O JOB NO.:	22260.00
FILE:	DETAILS.DWG

CIVIL DETAILS

SCHEDULE A, B
WATER DETAILS

DRAWING: **CD-4** OF: **7**

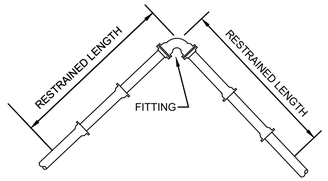

PIPE SIZE	90° BEND	45° BEND	22 1/2° BEND
	RESTRAINED LENGTH IN FEET (ONE SIDE)		
6"	30	13	6

NOTES:

1. RESTRAINED JOINT PIPE AND FITTINGS MAY BE USED IN LIEU OF THRUST BLOCKS IF RESTRAINED JOINT PIPE IS USED, THE CONTRACTOR SHALL RESTRAIN JOINTS FOR THE DISTANCES SHOWN IN THE ABOVE TABLES.
2. RESTRAINED LENGTHS SHOWN ARE MINIMUM AND FOR LINEAL FEET REQUIRED ON EACH SIDE OF FITTING INDICATED.
3. FOOTAGES ARE BASED ON 250 PSI PRESSURE AND 36" INCHES COVER. IF PRESSURE IS GREATER OR COVER IS LESS, THE RESTRAINED LENGTH SHALL BE INCREASED.

1 / TYP **ALTERNATIVE THRUST RESTRAINT**
NOT TO SCALE

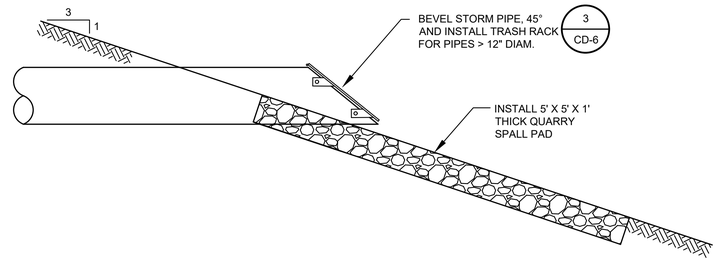

2 / C2-3 **BUILDING AND VAULT DRAIN AND RESERVOIR OVERFLOW DRAIN OUTLET**
NOT TO SCALE

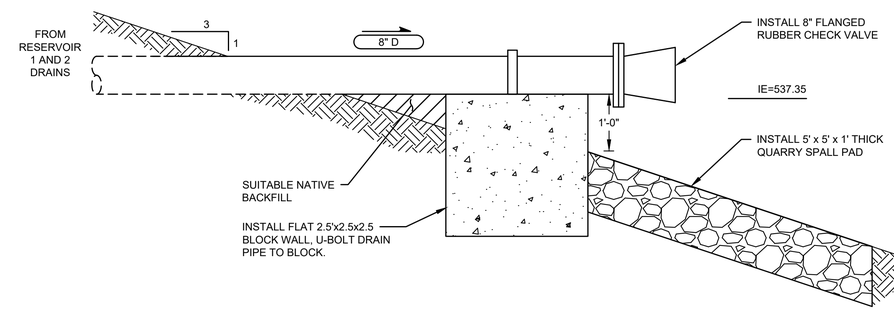

3 / C2-3 **RESERVOIR DRAIN OUTLET**
SCALE: 3/4"=1'-0"

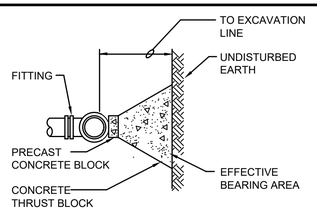

TYPICAL SECTION

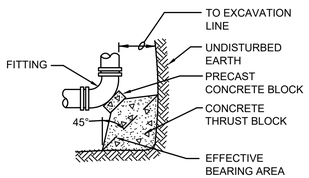

90°EL PLAN

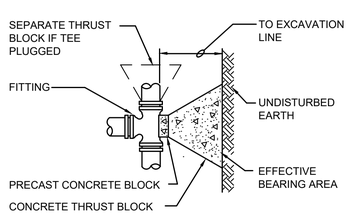

TEE PLAN

EFFECTIVE BEARING AREA REQUIRED

FITTING D	TEE	90°	45°	22 1/2°	11 1/4°
3"	4 SQ. FT.	6 SQ. FT.	3 SQ. FT.	2 SQ. FT.	2 SQ. FT.
4"	4 SQ. FT.	6 SQ. FT.	3 SQ. FT.	2 SQ. FT.	2 SQ. FT.
6"	4 SQ. FT.	6 SQ. FT.	3 SQ. FT.	2 SQ. FT.	2 SQ. FT.
8"	7 SQ. FT.	10 SQ. FT.	6 SQ. FT.	3 SQ. FT.	2 SQ. FT.

TYPICAL FOR SANDY SOIL WITH 2,000 P.S.F. BEARING STRENGTH & 100 P.S.I. WORKING PRESSURE.
ADJUST BEARING AREA BY PRESSURE & SOIL BEARING CAPACITY. USE TEE FOR DEAD ENDS.

NOTES:
1. BLOCKING SHALL BE TO SOLID BEARING SURFACE.
2. FITTING SHALL BE PROTECTED WITH A POLYTHENE ENCASEMENT.
3. BEARING SHALL BE PROPORTIONALLY INCREASED WITH PRESSURES IN EXCESS OF 100 P.S.I OR IN SOIL CONDITIONS WITH LESS THAN 2,OOO P.S.F BEARING STRENGTH.
4. ALL BLOCKS ON TEES SHALL BE SEPARATED FOR DIRECTION OF THRUST.

4 / TYP **THRUST BLOCKING**
NOT TO SCALE

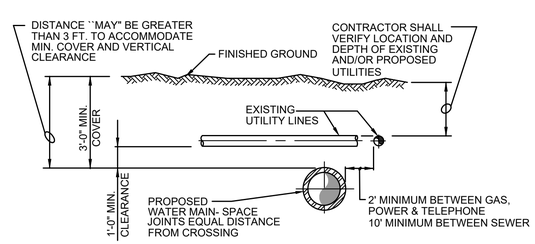

5 / TYP **TYPICAL UTILITY CROSSING**
NOT TO SCALE

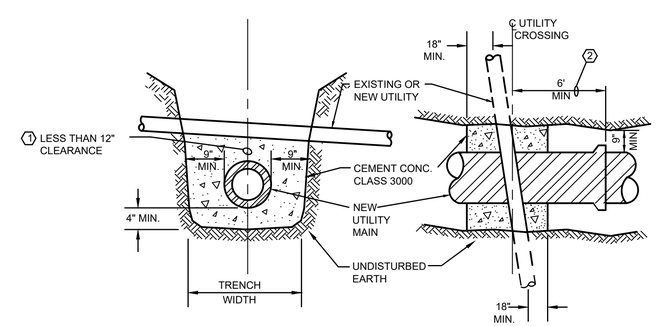

NOTES:
1. CONTRACTOR SHALL PROVIDE CONCRETE PIPE ENCASEMENT AT ALL EXISTING UTILITY CROSSINGS IN THE EVENT THAT A 12" SEPARATION CANNOT BE PROVIDED. THE CONTRACTOR SHALL FAMILIARIZE THEMSELVES WITH THE SITE UTILITIES TO ANTICIPATE PROVIDING AND INSTALLING CONCRETE ENCASEMENTS WHERE NECESSARY.
2. CONTRACTOR SHALL NOT CONSTRUCT ANY NEW PIPE JOINT WITHIN 6 FEET OF THE EXISTING CENTERLINE OF THE UTILITY CROSSING.

6 / TYP **CONCRETE PIPE ENCASEMENT DETAIL**
NOT TO SCALE

Gray & Osborne, Inc.
CONSULTING ENGINEERS
2102 CARRIAGE DRIVE SW, BUILDING I
OLYMPIA, WA 98502
(360) 292-7481

MICHAEL B. JOHNSON
STATE OF WASHINGTON
36498
REGISTERED PROFESSIONAL ENGINEER
4/7/25

MASON COUNTY PUD

MASON COUNTY PUD NO. 1
MANZANITA RESERVOIR AND BOOSTER PUMP STATION
1681 E McREAVY RD
UNION, WA

No.	DATE	REVISION

ISSUED FOR:	BID SET
ISSUE DATE:	APRIL 2025
APPROVED BY:	MBJ
CHECKED BY:	SLG
DRAWN BY:	JPW
DESIGNER:	SLG
G & O JOB NO.:	22260.00
FILE:	DETAILS.DWG

CIVIL DETAILS

SCHEDULE B
DRAINAGE AND MISCELLANEOUS DETAILS

DRAWING: **CD-5** OF: **7**

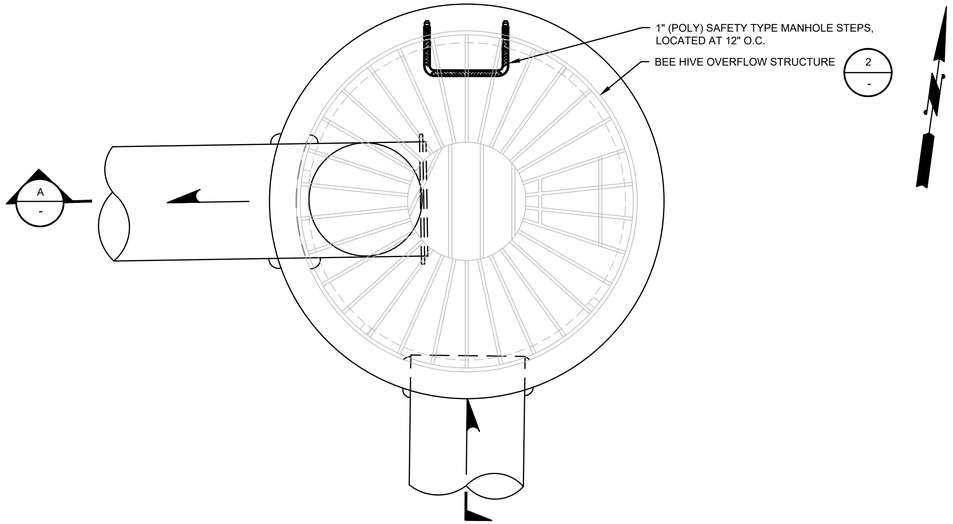

PLAN VIEW

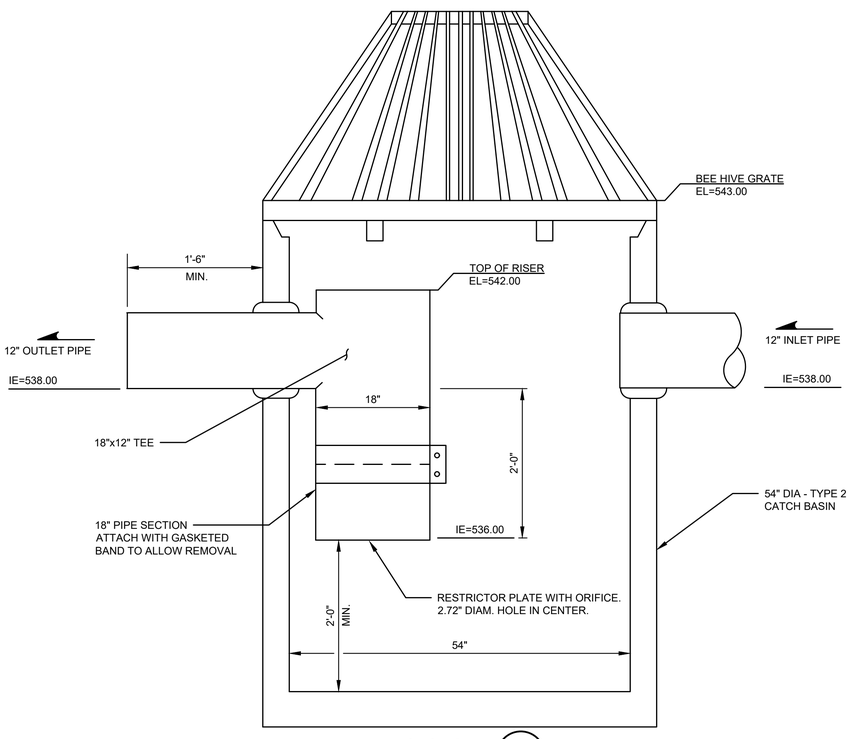

SECTION A / -
NOT TO SCALE

NOTES:

1. THE RESTRICTOR/SEPARATOR SHALL BE FABRICATED FROM .60" ALUMINUM OR .064" ALUMINIZED STEEL OR .064" GALVANIZED STEEL PIPE IN ACCORDANCE WITH AASHTO M 36, M196 AND M274. GALVANIZED STEEL SHALL HAVE ASPHALT TREATMENT 1.
2. OUTLET SHALL BE CONNECTED TO STORM DRAIN PIPE WITH A COUPLING BAND.
3. FRAME AND LADDER OR STEPS SHALL BE OFFSET SO THAT (1) THE RISER PIPE IS VISIBLE FROM TOP AND (2) CLIMB-DOWN SPACE IS CLEAR OF THE RISER.
4. METAL PARTS: CORROSION RESISTANT ALUMINUM. IF STEEL SUBSTITUTED FOR ALUMINUM, GALVANIZED PARTS NEED TO HAVE ASPHALT TREATMENT 1.

FLOW CONTROL STRUCTURE - CB NO. 3

1 / C2-5 NOT TO SCALE

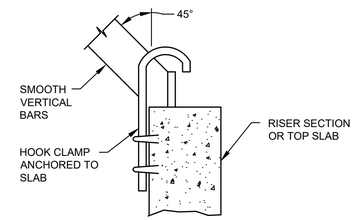

DETAIL HOOK CLAMP 1 / -
NOT TO SCALE

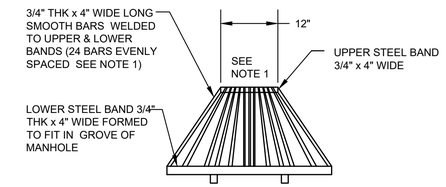

SECTION A / -
NOT TO SCALE

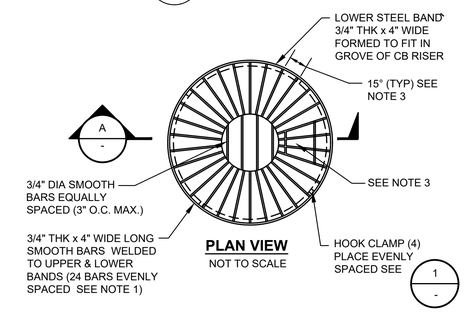

PLAN VIEW
NOT TO SCALE

NOTES:

1. ADJUST DIMENSIONS TO MAINTAIN 45° ANGLE ON VERTICAL BARS AND 3" O.C. MAX. SPACING OF BARS AROUND LOWER STEEL BAND. WHEN VERTICAL BAR SPACING EXCEEDS 3" O.C., AND CONCENTRIC HORIZONTAL RINGS, SPACED 3" O.C. TO THE STRUCTURE.
2. METAL PARTS: CORROSION RESISTANT, STEEL PARTS GALVANIZED.
3. PROVIDE MAINT. ACCESS BY WELDING (4) CROSS BARS TO (4) VERTICAL BARS AS SHOWN. HINGE UPPER ENDS W/ FLANGES/ BOLTS & PROVIDE LOCKING MECHANISM (W/PADLOCK) ON LOWER END. LOCATE LADDER STEPS DIRECTLY BELOW.

BEE HIVE OVERFLOW STRUCTURE DETAIL

2 / - NOT TO SCALE

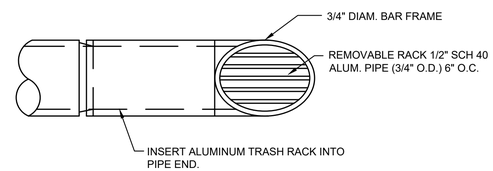

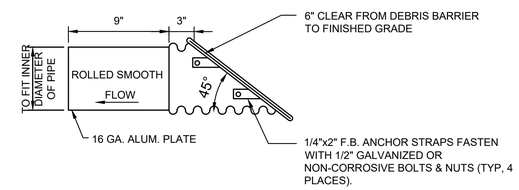

ALUMINUM TRASH RACK

NOTES:

1. ALL STEEL PARTS MUST BE GALVANIZED & ASPHALT COATED (TREATMENT 1 OR BETTER).
2. CONTRACTOR TO VERIFY DIMENSIONS.

TRASH RACK

3 / TYP NOT TO SCALE

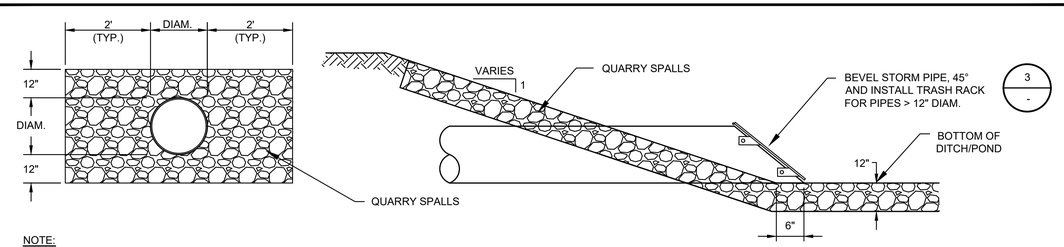

NOTE:

1. QUARRY SPALLS SHALL CONFORM TO SECTION 9-13 OF THE WSDOT STANDARD SPECIFICATIONS. MATERIALS USED FOR QUARRY SPALLS SHALL MEET THE REQUIREMENT OF SECTION 9-13.1(5) IF THE WSDOT STANDARD SPECIFICATIONS, EXCEPT THAT THE SIZE OF MATERIAL SHALL BE REVISED AS FOLLOWS: 100 PERCENT PASSING A 4-INCH SIEVE SIZE AND 40 PERCENT PASSING A 2-INCH SIEVE SIZE.

STORM PIPE INLET/OUTLET PROTECTION DETAIL

4 / TYP NOT TO SCALE

Gray & Osborne, Inc.
CONSULTING ENGINEERS
2102 CARRIAGE DRIVE SW,
BUILDING I
OLYMPIA, WA 98502
(360) 292-7481

MICHAEL B. JOHNSON
STATE OF WASHINGTON
36498
REGISTERED
PROFESSIONAL ENGINEER
4/7/25

MASON COUNTY PUD

MASON COUNTY PUD NO. 1
MANZANITA RESERVOIR AND BOOSTER PUMP STATION
1681 E McREAVY RD
UNION, WA

No.	DATE	REVISION

ISSUED FOR:	BID SET
ISSUE DATE:	APRIL 2025
APPROVED BY:	MBJ
CHECKED BY:	SLG
DRAWN BY:	JPW
DESIGNER:	SLG
G & O JOB NO.:	22260.00
FILE:	DETAILS.DWG

CIVIL DETAILS

SCHEDULE B STORMWATER DETAILS

DRAWING: **CD-6** OF: **7**

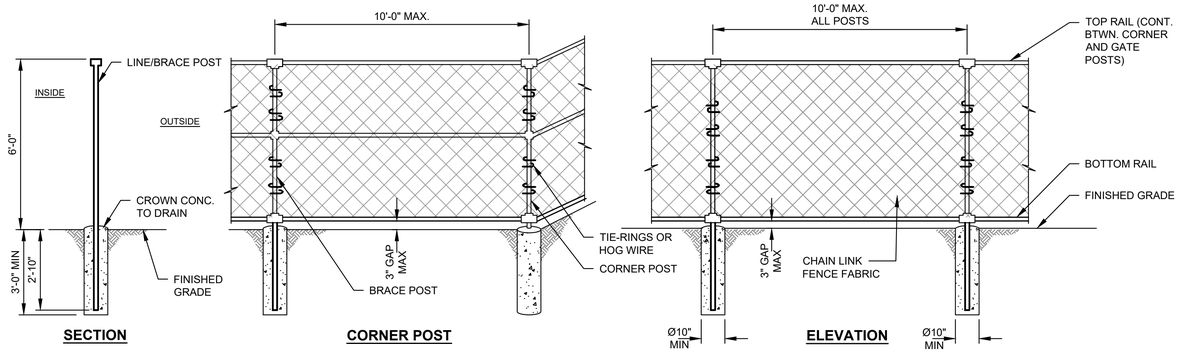

NOTES:

1. SEE SPECIFICATIONS FOR TYPICAL MATERIAL AND INSTALLATION REQUIREMENTS.
2. INSTALL CORNER POSTS WHERE ALIGNMENT CHANGES 30° OR MORE.
3. PROVIDE GALVANIZED FINISH ON POSTS, RAILS AND FITTINGS.

1 / TYP **FENCE DETAIL**

SCALE = 3\8" = 1' - 0"

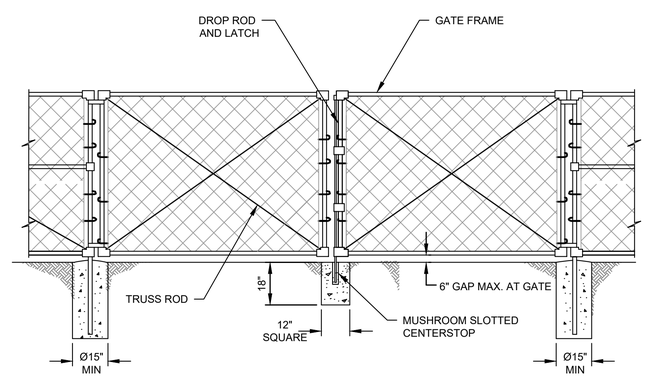

NOTES:

1. SEE SPECIFICATIONS FOR TYPICAL MATERIAL AND INSTALLATION REQUIREMENTS.
2. INSTALL CORNER POSTS WHERE ALIGNMENT CHANGES 30° OR MORE.
3. PROVIDE GALVANIZED FINISH ON POSTS, RAILS AND FITTINGS.
4. PROVIDE GALVANIZED IRON, MUSHROOM TYPE, SLOTTED CENTERSTOP FOR DOUBLE GATE DROP ROD. EMBED IN 12"X12"X18" DIA. CONC. FOUNDATION.
5. DROP ROD FOR SWING SHALL COME EQUIPPED WITH PADLOCK LATCH.

2 / TYP **DOUBLE SWING GATE DETAIL**

SCALE = 3\8" = 1' - 0"

Gray & Osborne, Inc.
CONSULTING ENGINEERS
2102 CARRIAGE DRIVE SW,
BUILDING I
OLYMPIA, WA 98502
(360) 292-7481

MICHAEL B. JOHNSON
STATE OF WASHINGTON
36498
REGISTERED
PROFESSIONAL ENGINEER
4/7/25

MASON COUNTY PUD

MASON COUNTY PUD NO. 1
MANZANITA RESERVOIR AND BOOSTER PUMP STATION
1681 E McREAVY RD
UNION, WA

No.	DATE	REVISION

ISSUED FOR:	BID SET
ISSUE DATE:	APRIL 2025
APPROVED BY:	MBJ
CHECKED BY:	SLG
DRAWN BY:	JPW
DESIGNER:	SLG
G & O JOB NO.:	22260.00
FILE:	DETAILS.DWG

CIVIL DETAILS

SCHEDULE B
FENCE AND GENERATOR PAD DETAILS

DRAWING: **CD-7** OF: **7**

PIPING SYMBOLS

DOUBLE LINE	SINGLE LINE	
		EXISTING PIPE
		NEW PIPE
		EXISTING PIPE TO BE REMOVED
		WELDED
		FLANGED
		MECHANICAL JOINT
		SOLVENT WELDED JOINT
		FLANGED COUPLING ADAPTER
		FLEXIBLE COUPLING
		ADAPTOR FLANGE
		RESTRAINED FLEXIBLE COUPLING
		RUBBER EXPANSION JOINT
		RESTRAINED RUBBER EXPANSION JOINT
		BLIND FLANGE
		CHECK VALVE
		GATE VALVE
		PLUG VALVE
		BUTTERFLY VALVE
		CONCENTRIC REDUCER
		ECCENTRIC REDUCER
		ELBOW, 45°
		ELBOW, 90°
		ELBOW UP
		ELBOW DOWN
		TEE
		TEE UP
		TEE DOWN
		CROSS
		WYE

DOUBLE LINE	SINGLE LINE	
		SCREWED JOINT
		GROOVED COUPLING
		UNION
		BELL UP
		FLEXIBLE HOSE OR TUBING
		BALL VALVE
M	M	VALVE WITH MOTOR ACTUATOR
		DENOTES ITEMS TO BE REMOVED AND DISPOSED OF BY CONTRACTOR IN ACCORDANCE WITH THE SPECIFICATIONS

AREA, PIPE AND EQUIPMENT IDENTIFICATIONS

AREA — EQUIPMENT TYPE — EQUIPMENT NUMBER (SEQUENTIAL LISTING)

01 BP 01

AREA

01	HIGHLAND PARK
02	MANZANITA RESERVOIRS
03	MANZANITA BOOSTER STATION BUILDING
04	ALDERBROOK

PIPE

W	WATER
D	DRAIN
S	SAMPLE LINE

EQUIPMENT

BP	BOOSTER PUMP

VALVE

PRV	PRESSURE REDUCING VALVE
V	CHECK VALVE

INSTRUMENTS

FE/FIT	FLOW METER AND FLOW INDICATOR / TRANSMITTER
LS	LEVEL SWITCH
LT	LEVEL TRANSDUCER
PG	PRESSURE GAUGE
PT	PRESSURE TRANSDUCER

PIPING MATERIAL AND JOINTING SCHEDULE

(EXCEPT WHERE SHOWN DIFFERENTLY ON THE DRAWINGS)

PROCESS PIPING CODE (SEE THIS SHEET)	INSIDE STRUCTURES	BURIED
W (OFFSITE)	—	C900 PVC W/ DI FITTING RESTRAINED JOINT
W (ON SITE)	FLANGED DUCTILE IRON	RESTRAINED MECHANICAL JOINT DUCTILE IRON
D	<4" SOLVENT WELDED PVC >4" FLANGED DUCTILE IRON	RESTRAINED MECHANICAL JOINT DUCTILE IRON
S	—	WELDED HDPE

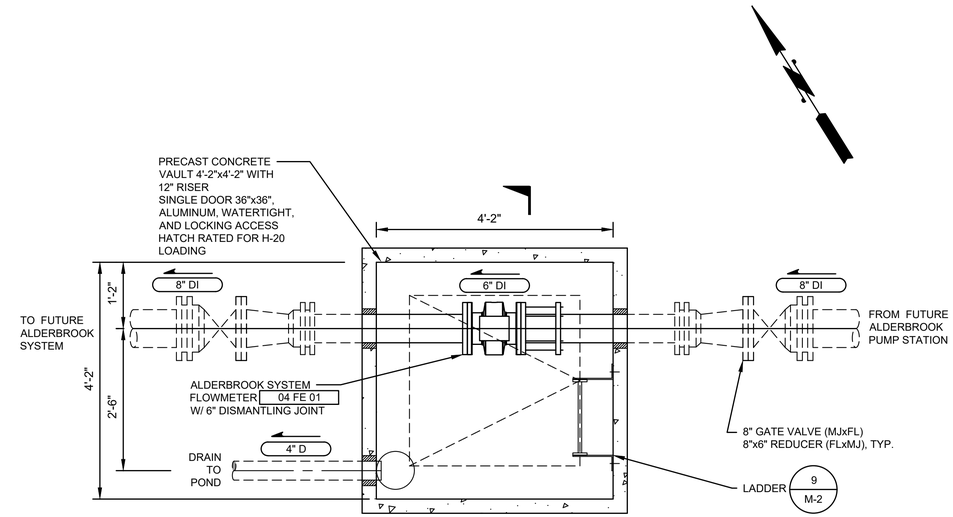

A -

ALDERBROOK SYSTEM FLOWMETER VAULT

1 C2-3 SCALE: 3/4"=1'-0"

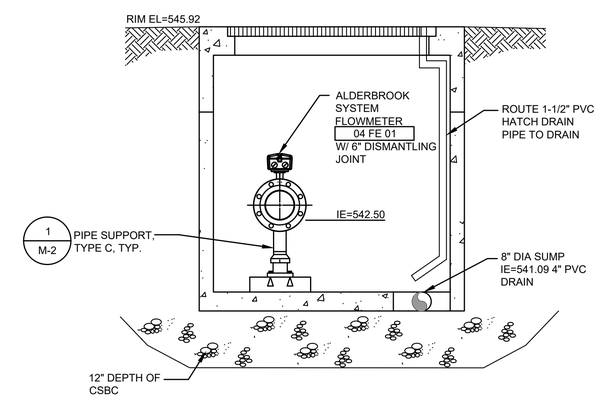

A - **SECTION**

SCALE: 3/4"=1'-0"

Gray & Osborne, Inc.
CONSULTING ENGINEERS
2102 CARRIAGE DRIVE SW, BUILDING I
OLYMPIA, WA 98502
(360) 292-7481

MICHAEL B. JOHNSON — STATE OF WASHINGTON — 36488 — REGISTERED PROFESSIONAL ENGINEER

4/7/25

MASON COUNTY PUD

MASON COUNTY PUD NO. 1
MANZANITA RESERVOIR AND BOOSTER PUMP STATION
1681 E McREAVY RD
UNION, WA

No.	DATE	REVISION

ISSUED FOR:	BID SET
ISSUE DATE:	APRIL 2025
APPROVED BY:	MBJ
CHECKED BY:	SLG
DRAWN BY:	JPW
DESIGNER:	SLG
G & O JOB NO.:	22260.00
FILE:	M_GEN_SYM.DWG

0 1" 2"
TWO INCHES AT FULL SCALE. IF NOT, SCALE ACCORDINGLY

MECHANICAL

SCHEDULE A
PIPE SYMBOLS, GENERAL SYMBOLS, AREA AND EQUIPEMENT IDENTIFICATIONS

DRAWING: **M-1** OF: **2**

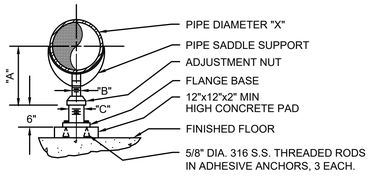

PIPE SIZE "X"	MIN. LENGTH "A"	MAX. LENGTH "A"	PIPE DIAM. "B"	PIPE DIAM. "C"
4"	9 1/4"	1'-2"	2 1/2"	3"
6"	10 1/2"	1'-3 1/4"	2 1/2"	3"
8"	11 3/4"	1'-4 1/2"	2 1/2"	3"

NOTES :

1. PIPE SUPPORT SHALL BE "ANVIL" FIG. 264 OR EQUAL
2. PIPE "C" TO BE SET IN THREADED FLANGE BASE AND WELDED ALL AROUND.
3. ALL STEEL NOT STAINLESS SHALL BE HOT DIPPED GALVANIZED AFTER FABRICATION.

1 / TYP **PIPE SUPPORT TYPE C**
NOT TO SCALE

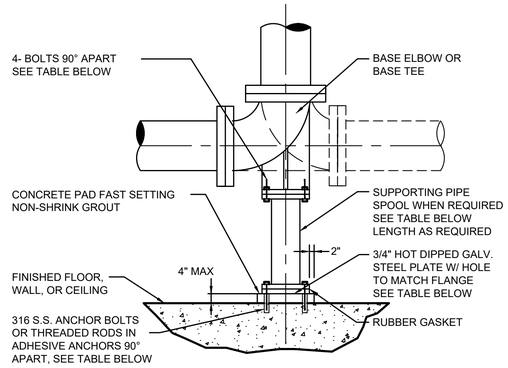

BASE TEE OR ELBOW DIA.	BOLT OR ROD DIA.	SUPPORTING PIPE SPOOL DIA.	STEEL PLATE DIMENSIONS
3"	1/2"	1 1/2"	5" X 5"
4"	5/8"	2"	6" X 6"
6"	5/8"	2 1/2"	7" X 7"
8"	5/8"	4"	8" X 8"

NOTES :

1. SUPPORTING PIPE SPOOL NOT REQUIRED WHEN CONCRETE PAD HAS TO BE LESS THAN 4" HIGH IN ORDER TO INSTALL A SUPPORTING PIPE SPOOL.
2. ALL STEEL NOT STAINLESS SHALL BE HOT DIPPED GALVANIZED AFTER FABRICATION.

2 / TYP **PIPE SUPPORT TYPE D**
NOT TO SCALE

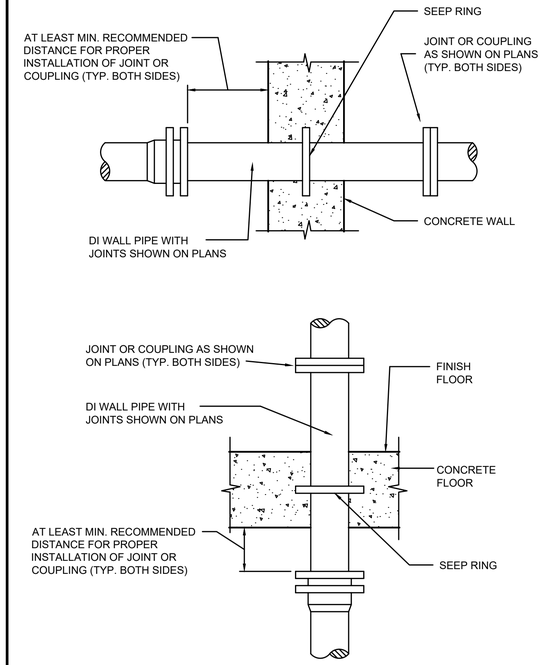

3 / TYP **TYPICAL CONCRETE PIPE PENETRATION**
NOT TO SCALE

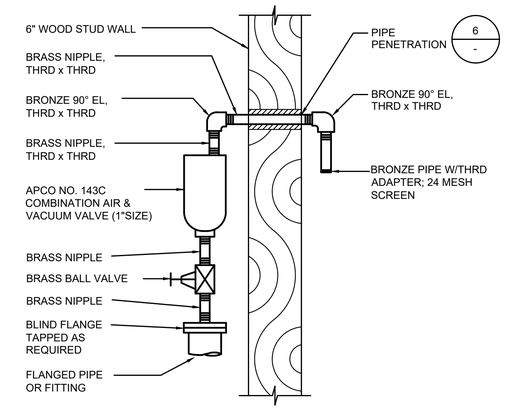

4 / - **COMBINATION AIR/VACUUM VALVE**
NOT TO SCALE

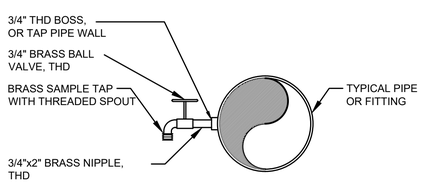

5 / - **HOSE BIBB**
NOT TO SCALE

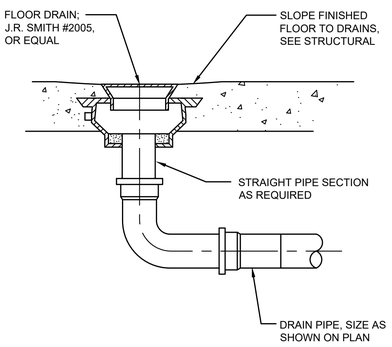

6 / - **FLOOR DRAIN**
NOT TO SCALE

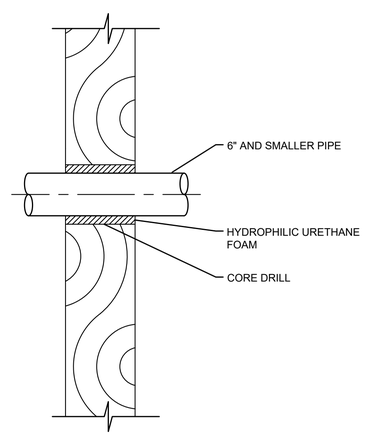

7 / TYP **TYPICAL WOOD WALL PIPE PENETRATION**
NOT TO SCALE

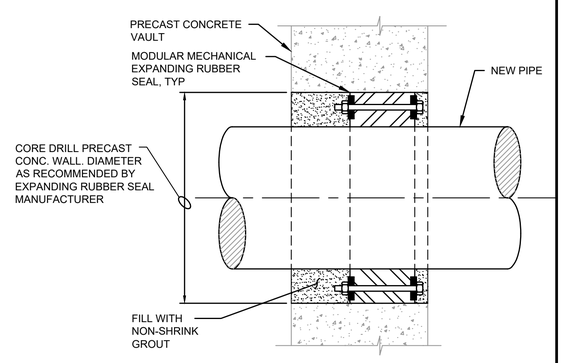

NOTE:

1. MODULAR MECHANICAL EXPANDING RUBBER SEAL SHALL BE EQUIPPED WITH 316 STAINLESS HARDWARE.

8 / TYP **PIPE PENETRATIONS THROUGH PRECAST CONCRETE VAULT DETAIL**
NOT TO SCALE

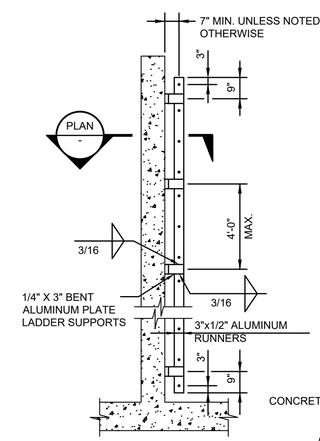

ELEVATION

NOTES:

1. LADDERS TO COMPLY WITH WAC STANDARDS.
2. LADDERS SHALL BE PROVIDED WITH A LADDER UP SAFETY POST.

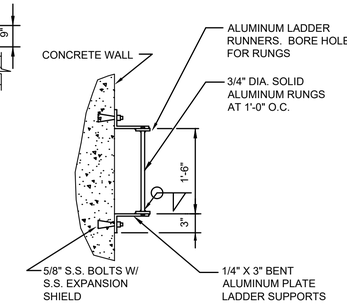

PLAN

9 / TYP **LADDER DETAIL**
NOT TO SCALE

Gray & Osborne, Inc.
CONSULTING ENGINEERS
2102 CARRIAGE DRIVE SW,
BUILDING I
OLYMPIA, WA 98502
(360) 292-7481

MICHAEL B. JOHNSON
STATE OF WASHINGTON
36498
REGISTERED
PROFESSIONAL ENGINEER

MASON COUNTY PUD

MASON COUNTY PUD NO. 1
MANZANITA RESERVOIR AND BOOSTER PUMP STATION
1681 E McREAVY RD
UNION, WA

No.	DATE	REVISION

ISSUED FOR:	BID SET
ISSUE DATE:	APRIL 2025
APPROVED BY:	MBJ
CHECKED BY:	SLG
DRAWN BY:	JPW
DESIGNER:	SLG
G & O JOB NO.:	22260.00
FILE:	BS_DET.DWG

0 1" 2"
TWO INCHES AT FULL SCALE.
IF NOT, SCALE ACCORDINGLY

MECHANICAL

SCHEDULE A DETAILS

DRAWING: **M-2** OF: **2**

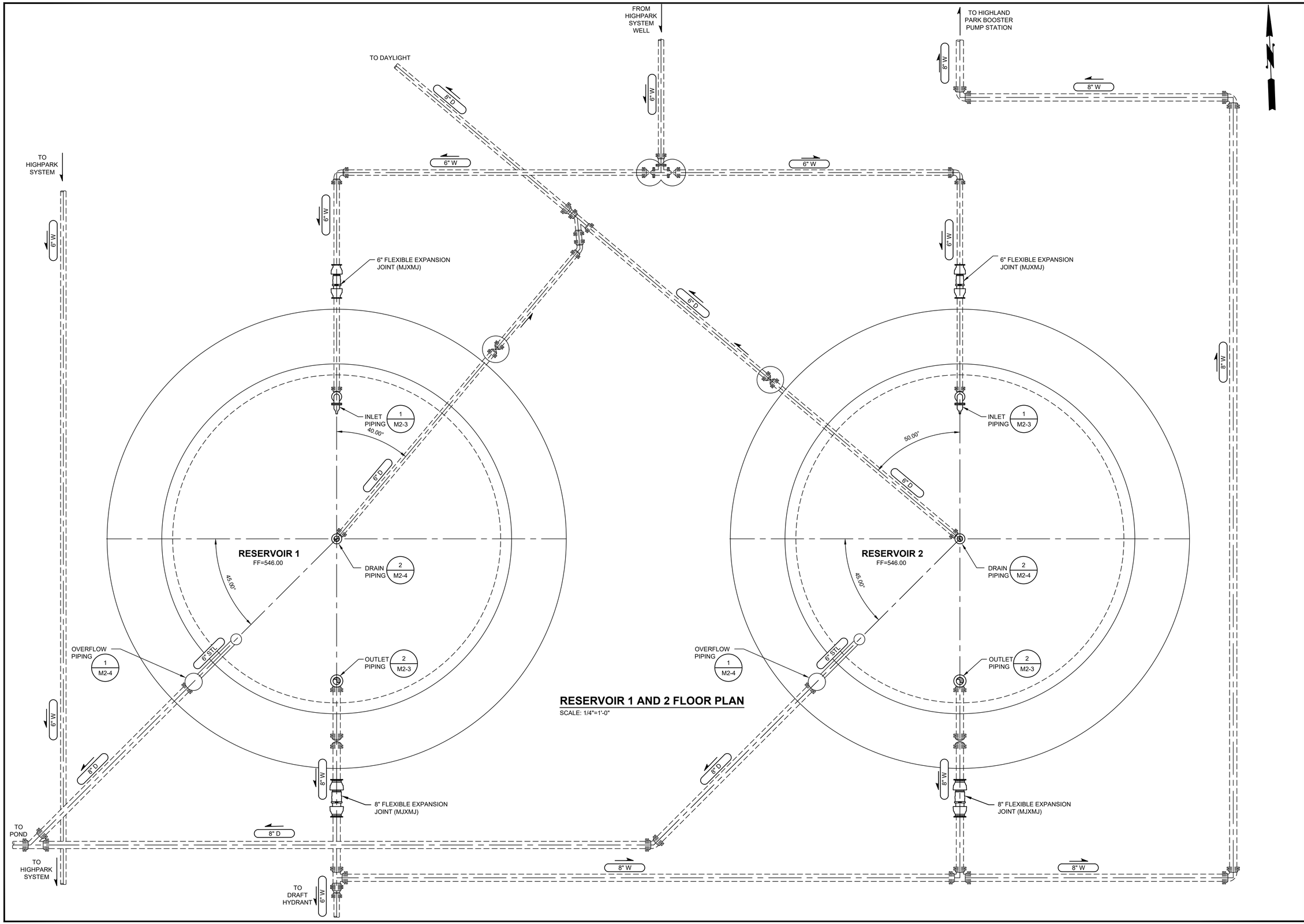

RESERVOIR 1 AND 2 FLOOR PLAN

SCALE: 1/4"=1'-0"

Gray & Osborne, Inc.
CONSULTING ENGINEERS
2102 CARRIAGE DRIVE SW, BUILDING I
OLYMPIA, WA 98502
(360) 292-7481

MICHAEL B. JOHNSON
STATE OF WASHINGTON
36498
REGISTERED PROFESSIONAL ENGINEER
4/7/25

MASON COUNTY PUD

MASON COUNTY PUD NO. 1
MANZANITA RESERVOIR AND BOOSTER PUMP STATION
1681 E McREAVY RD
UNION, WA

No.	DATE	REVISION

ISSUED FOR:	BID SET
ISSUE DATE:	APRIL 2025
APPROVED BY:	MBJ
CHECKED BY:	SLG
DRAWN BY:	JPW
DESIGNER:	SLG
G & O JOB NO.:	22260.00
FILE:	M_CLRPED.DWG

0 1" 2"
TWO INCHES AT FULL SCALE.
IF NOT, SCALE ACCORDINGLY

MECHANICAL

SCHEDULE A
RESERVOIR 1 AND 2 FLOOR PLAN

DRAWING: **M2-1** OF: **6**

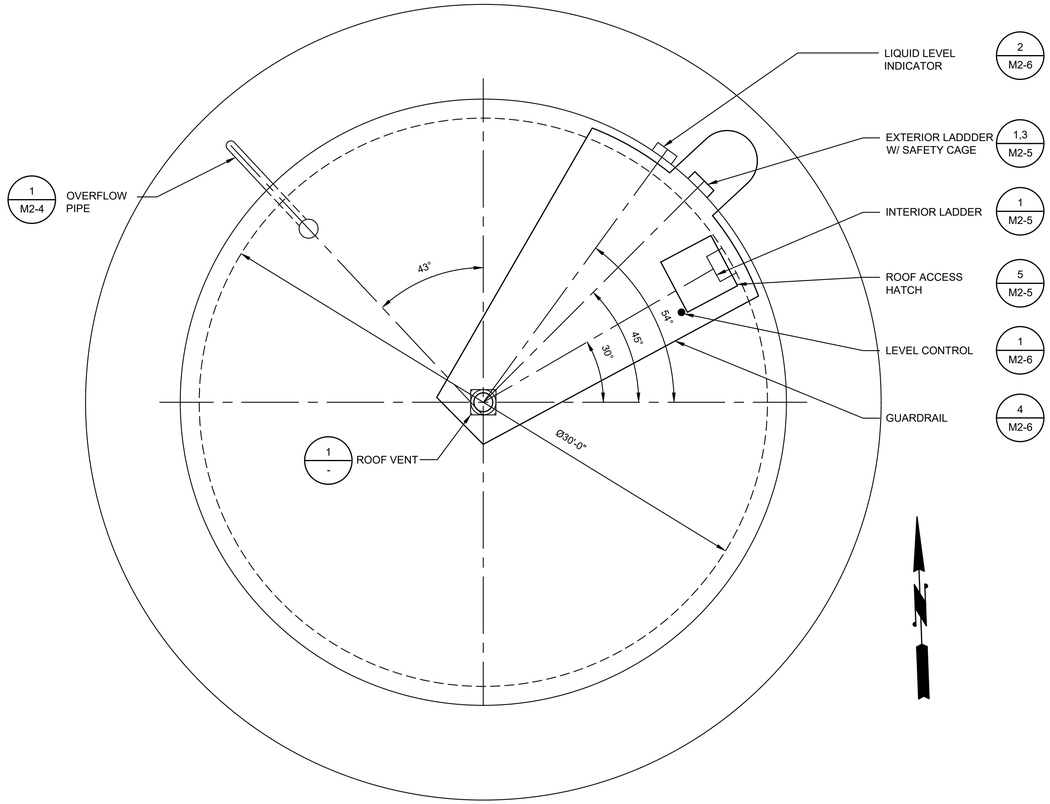

RESERVOIR 1 AND 2 ROOF PLAN

SCALE: 1/4"=1'-0"

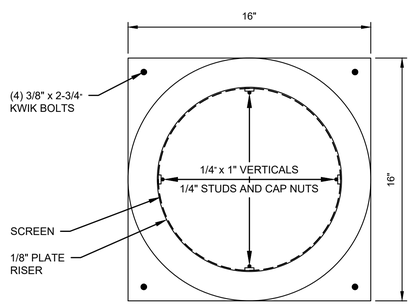

TOP VIEW

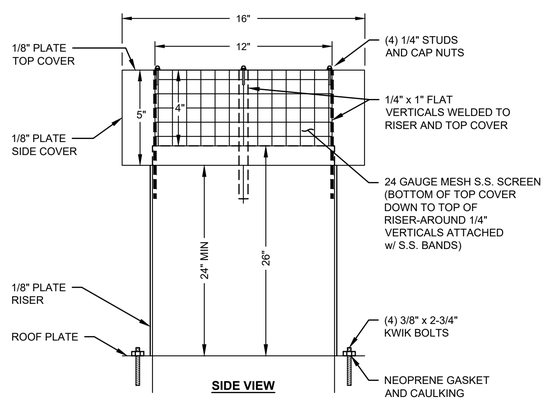

SIDE VIEW

NOTES:

1. HOT DIP GALVANIZED AFTER FABRICATION, PRIOR TO INSTALLING SCREENS. CAN BE UPGRADED TO 12
2. ROOF VENT SHALL BE FURNISHED AND INSTALLED AS SPECIFIED IN SECTION 13212 OF THE SPECIFICATIONS.

1 / TYP **ROOF VENT**

NOT TO SCALE

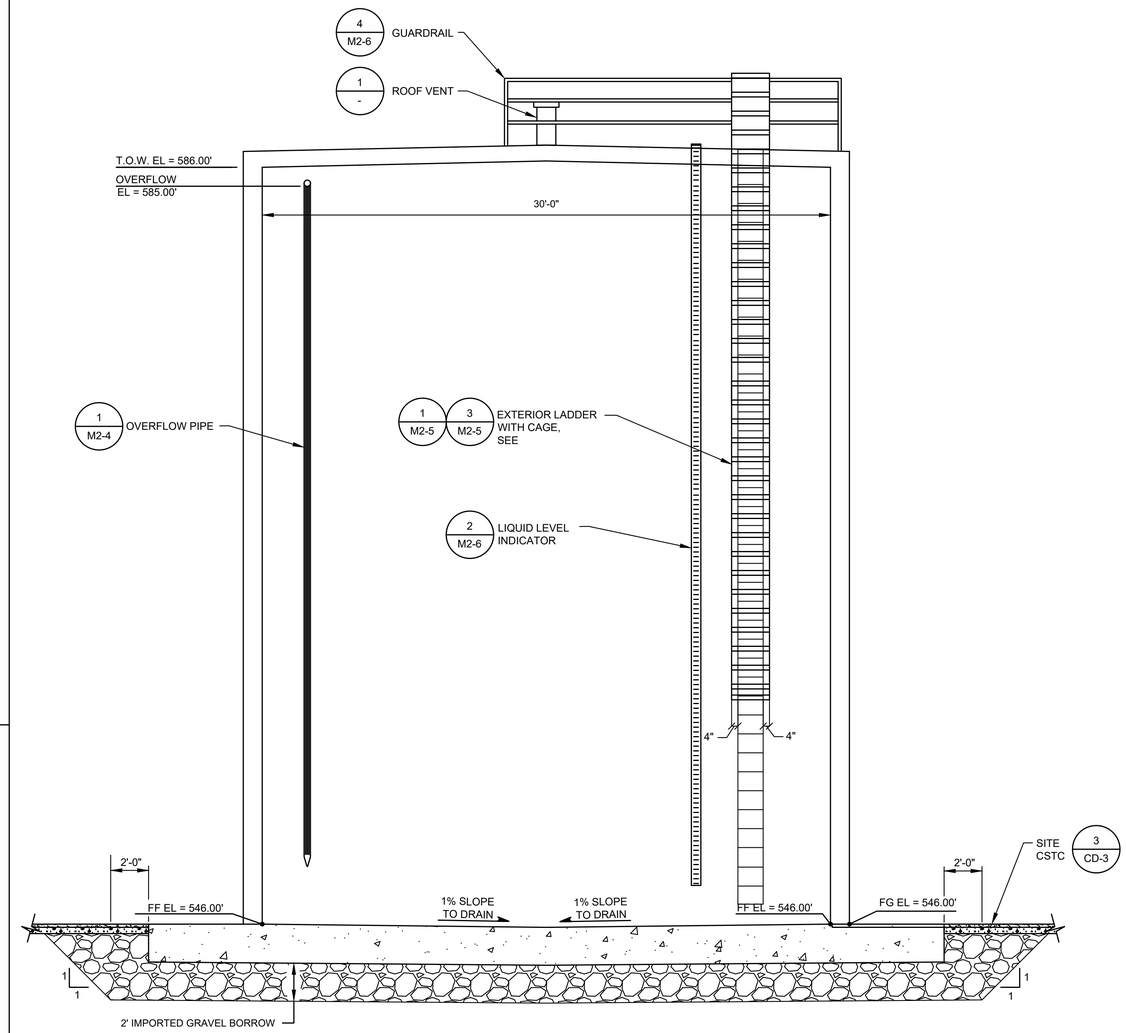

NOTE:

1. NOT ALL ITEMS SHOWN IN EXACT LOCATION FOR CLARITY.

RESERVOIR 1 AND 2 ELEVATION

SCALE: 1/4"=1'-0"

Gray & Osborne, Inc.
CONSULTING ENGINEERS
2102 CARRIAGE DRIVE SW, BUILDING I
OLYMPIA, WA 98502
(360) 292-7481

MICHAEL B. JOHNSON
STATE OF WASHINGTON
36498
REGISTERED PROFESSIONAL ENGINEER
4/7/25

MASON COUNTY PUD

MASON COUNTY PUD NO. 1
MANZANITA RESERVOIR AND BOOSTER PUMP STATION
1681 E McREAVY RD
UNION, WA

No.	DATE	REVISION

ISSUED FOR:	BID SET
ISSUE DATE:	APRIL 2025
APPROVED BY:	MBJ
CHECKED BY:	SLG
DRAWN BY:	JPW
DESIGNER:	SLG
G & O JOB NO.:	22260.00
FILE:	M_CLRPED.DWG

0 1" 2"
TWO INCHES AT FULL SCALE.
IF NOT, SCALE ACCORDINGLY

MECHANICAL

SCHEDULE A
RESERVOIR ROOF PLAN, ELEVATION AND DETAIL

DRAWING: **M2-2** OF: **6**

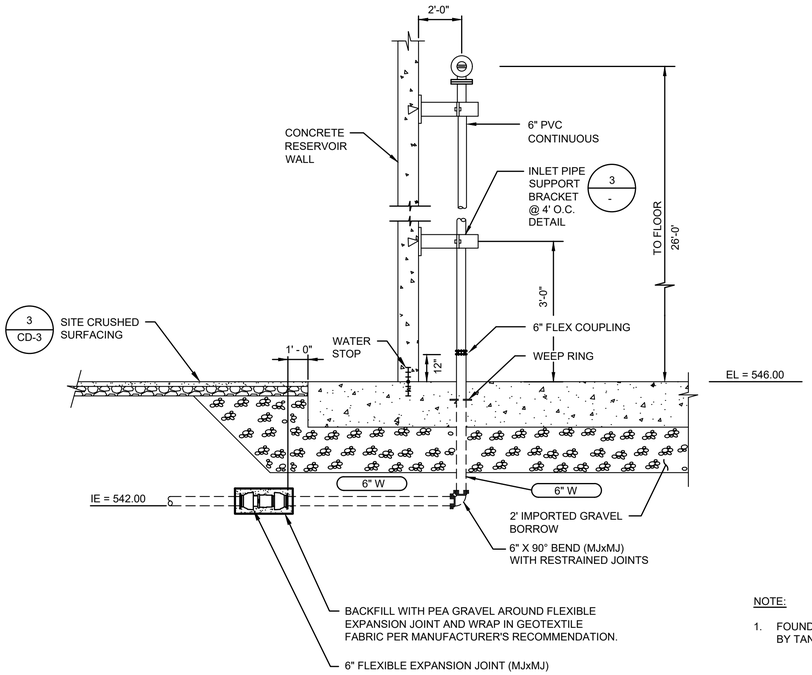

NOTE:

1. FOUNDATION DESIGNED BY TANK MANUFACTURER.

1 / M2-1 **INLET PIPE**
NOT TO SCALE

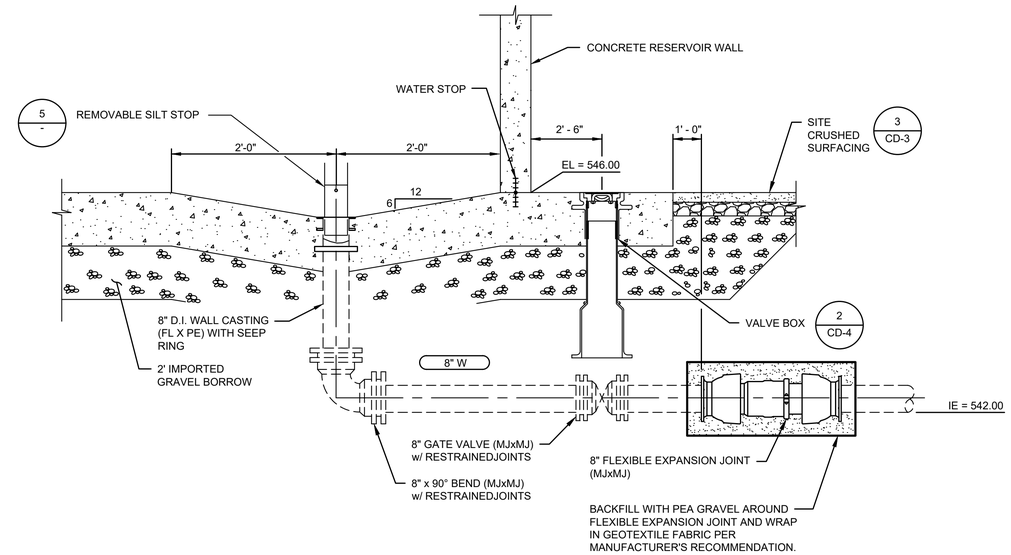

NOTE:

1. FOUNDATION DESIGNED BY TANK MANUFACTURER.

2 / M2-1 **OUTLET PIPE**
NOT TO SCALE

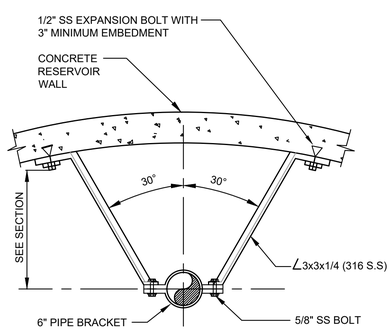

3 / - **INLET PIPE SUPPORT**
NOT TO SCALE

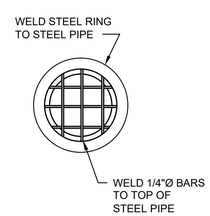

4 / - **OUTLET PIPE GRATE**
NOT TO SCALE

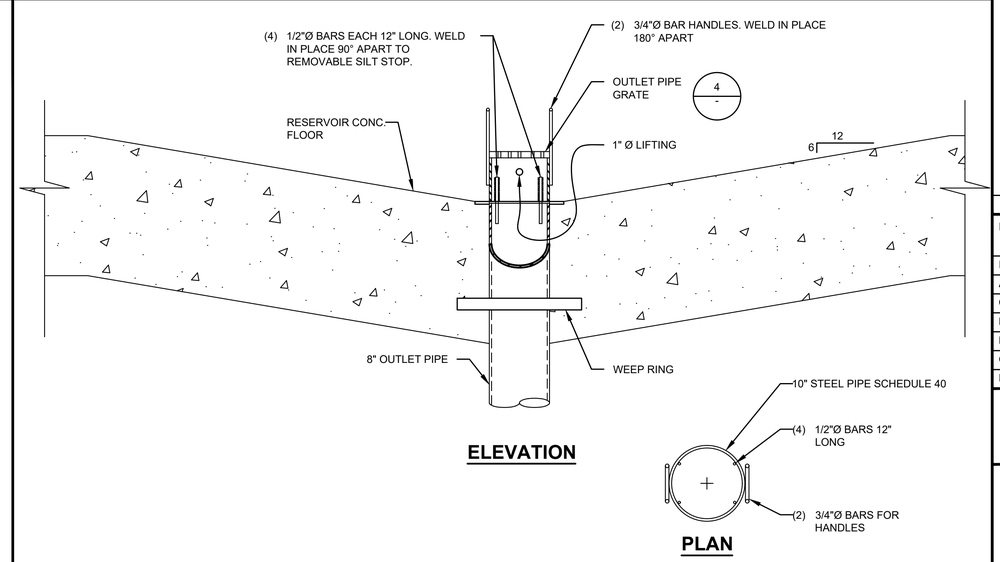

NOTE:

1. REMOVABLE SILT STOP TO BE INSTALLED AT OUTLET PIPE.

5 / TYP **REMOVABLE SILT STOP**
NOT TO SCALE

Gray & Osborne, Inc.
CONSULTING ENGINEERS
2102 CARRIAGE DRIVE SW, BUILDING I
OLYMPIA, WA 98502
(360) 292-7481

MICHAEL B. JOHNSON
STATE OF WASHINGTON
36498
REGISTERED PROFESSIONAL ENGINEER
4/7/25

MASON COUNTY PUD

MASON COUNTY PUD NO. 1
MANZANITA RESERVOIR AND BOOSTER PUMP STATION
1681 E McREAVY RD
UNION, WA

No.	DATE	REVISION

ISSUED FOR:	BID SET
ISSUE DATE:	APRIL 2025
APPROVED BY:	MBJ
CHECKED BY:	SLG
DRAWN BY:	JPW
DESIGNER:	SLG
G & O JOB NO.:	22260.00
FILE:	M_CLRDET.DWG

0 1" 2"
TWO INCHES AT FULL SCALE. IF NOT, SCALE ACCORDINGLY

MECHANICAL

SCHEDULE A
RESERVOIR DETAILS

DRAWING: **M2-3** OF: **6**

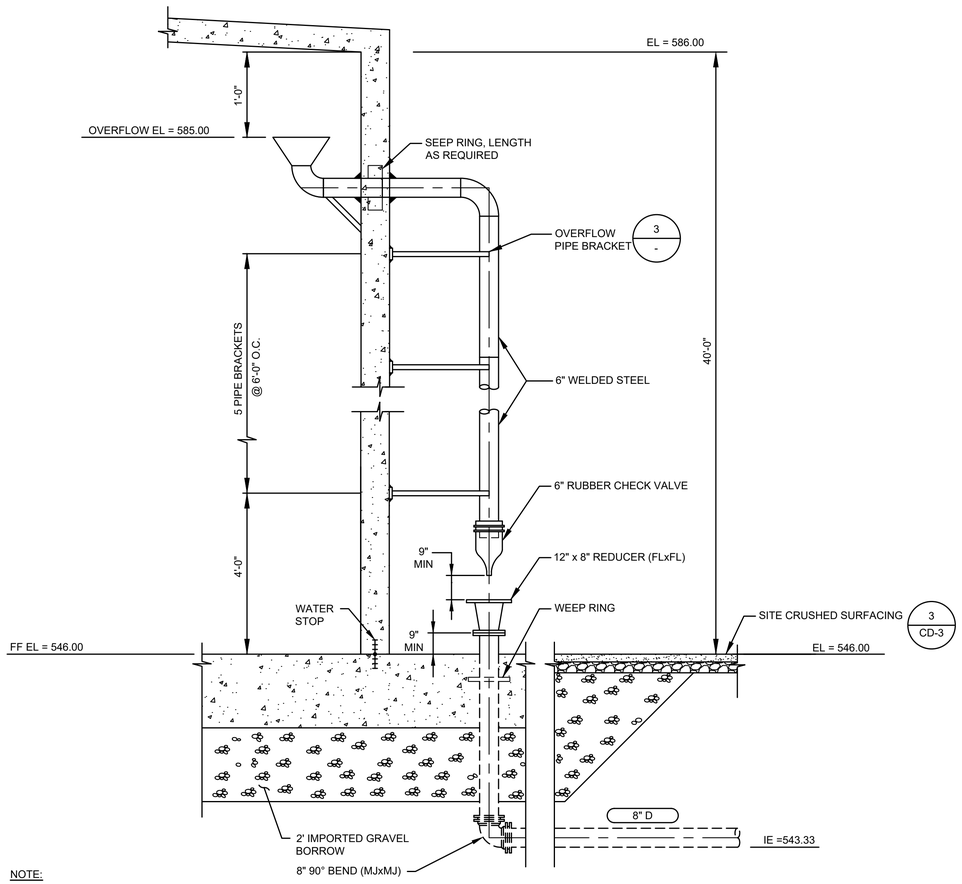

NOTE:

1. FOUNDATION DESIGNED BY TANK MANUFACTURER.

1 / M2-1 **OVERFLOW PIPE**
NOT TO SCALE

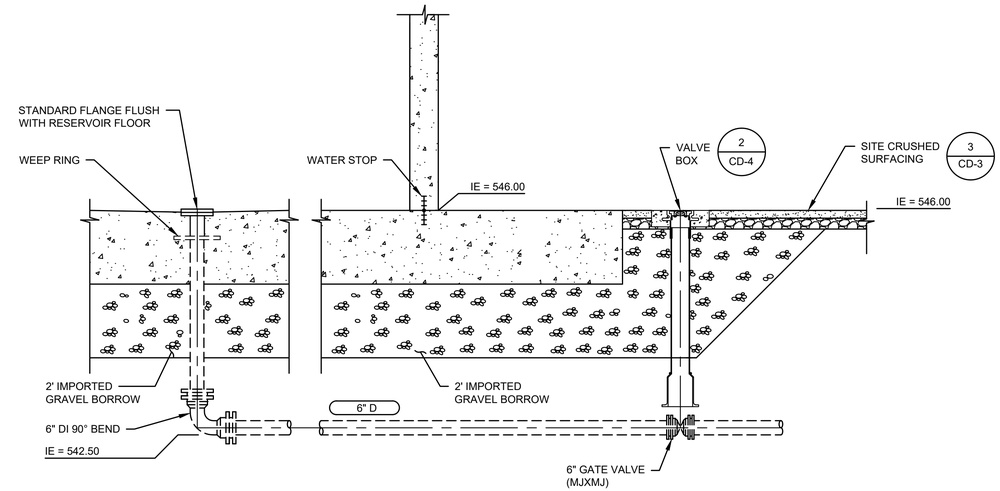

NOTE:

1. FOUNDATION DESIGNED BY TANK MANUFACTURER.

2 / M2-1 **DRAIN PIPE**
NOT TO SCALE

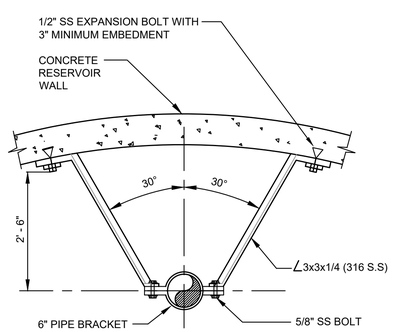

3 / - **OVERFLOW PIPE SUPPORT**
NOT TO SCALE

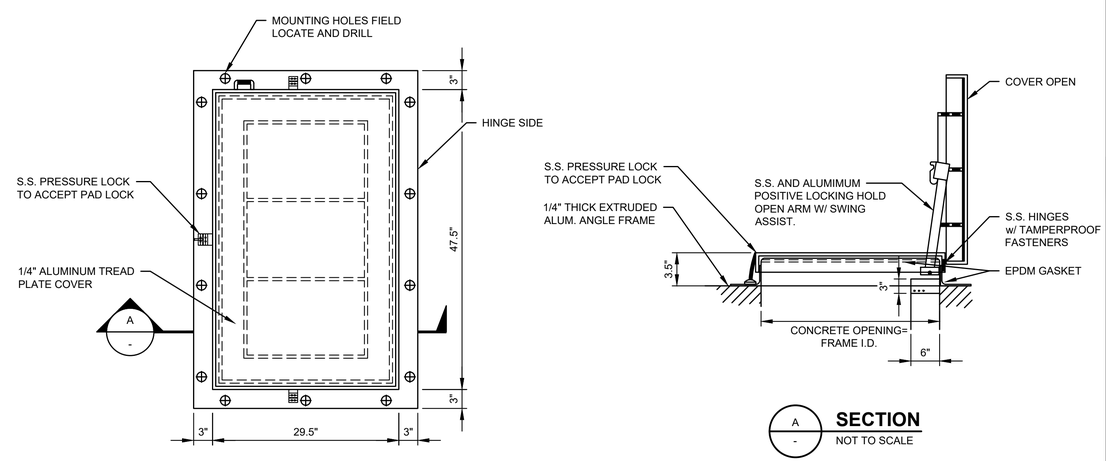

NOTE:

1. THE RESERVOIR ACCESS HATCH SHALL HAVE A RAISED CURBS, WATERTIGHT COVERS WITH OVERLAPPING EDGES. THE HATCH SHALL BE HINGED ON ONE SIDE WITH LOCKING DEVICE.

A / - **SECTION**
NOT TO SCALE

4 / M2-5 **RESERVOIR ACCESS HATCH**
NOT TO SCALE

Gray & Osborne, Inc.
CONSULTING ENGINEERS
2102 CARRIAGE DRIVE SW, BUILDING I
OLYMPIA, WA 98502
(360) 292-7481

MICHAEL B. JOHNSON — STATE OF WASHINGTON — 36498 — REGISTERED PROFESSIONAL ENGINEER
4/7/25

MASON COUNTY PUD

MASON COUNTY PUD NO. 1
MANZANITA RESERVOIR AND BOOSTER PUMP STATION
1681 E McREAVY RD
UNION, WA

No.	DATE	REVISION

ISSUED FOR:	BID SET
ISSUE DATE:	APRIL 2025
APPROVED BY:	MBJ
CHECKED BY:	SLG
DRAWN BY:	JPW
DESIGNER:	SLG
G & O JOB NO.:	22260.00
FILE:	M_CLRDET.DWG

0 1" 2"
TWO INCHES AT FULL SCALE. IF NOT, SCALE ACCORDINGLY

MECHANICAL

SCHEDULE A RESERVOIR DETAILS

DRAWING: **M2-4** OF: **6**

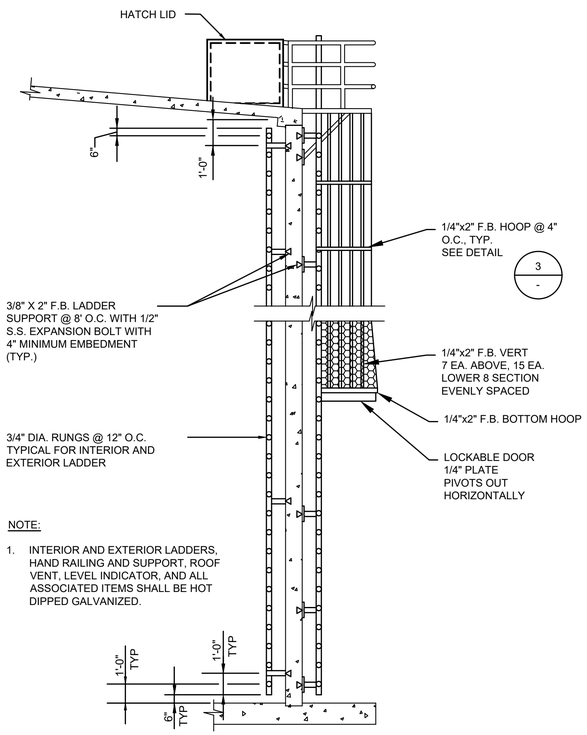

NOTE:

1. INTERIOR AND EXTERIOR LADDERS, HAND RAILING AND SUPPORT, ROOF VENT, LEVEL INDICATOR, AND ALL ASSOCIATED ITEMS SHALL BE HOT DIPPED GALVANIZED.

1 / - INTERIOR/EXTERIOR LADDERS

NOT TO SCALE

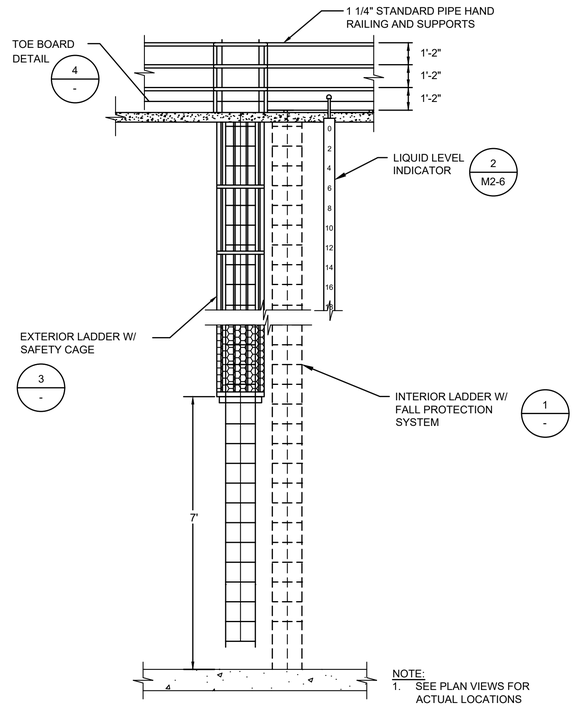

NOTE:

1. SEE PLAN VIEWS FOR ACTUAL LOCATIONS

2 / - NORTH ELEVATION

NOT TO SCALE

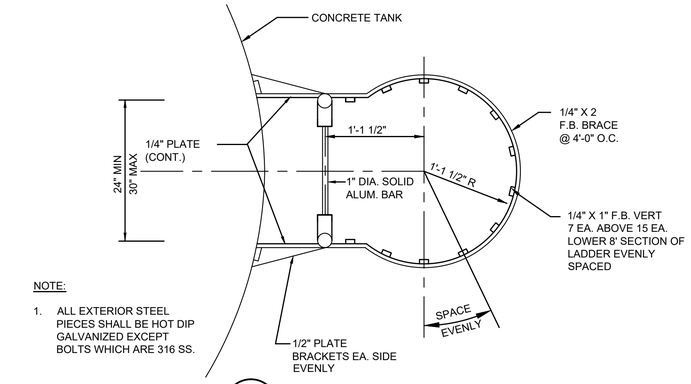

NOTE:

1. ALL EXTERIOR STEEL PIECES SHALL BE HOT DIP GALVANIZED EXCEPT BOLTS WHICH ARE 316 SS.

3 / - SAFETY CAGE - PLAN

SCALE: 1/2"=1'-0"

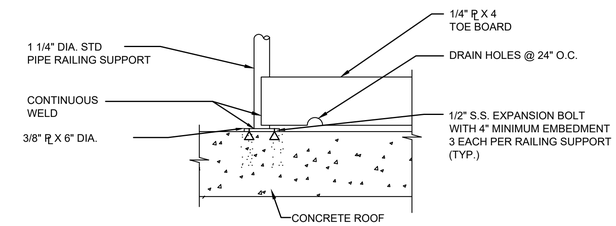

4 / - TOEBOARD

NOT TO SCALE

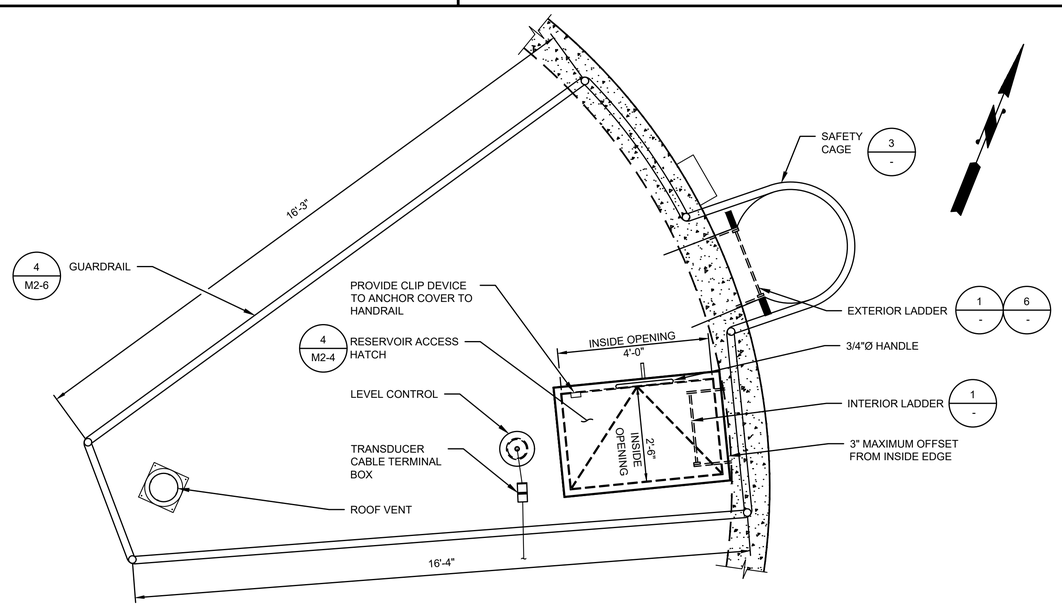

5 / M2-1 ROOF ACCESS LAYOUT

SCALE: 1/2"=1'-0"

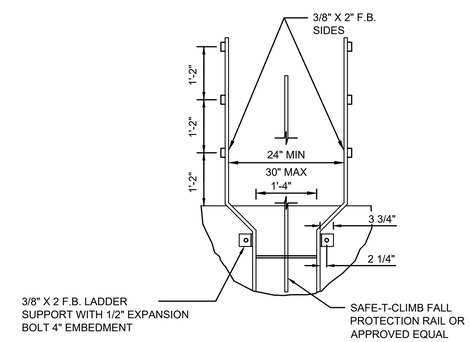

6 / - EXTERIOR ELEVATION

NOT TO SCALE

Gray & Osborne, Inc.
CONSULTING ENGINEERS
2102 CARRIAGE DRIVE SW, BUILDING I
OLYMPIA, WA 98502
(360) 292-7481

MICHAEL B. JOHNSON
STATE OF WASHINGTON
36488
REGISTERED PROFESSIONAL ENGINEER
4/7/25

MASON COUNTY PUD

MASON COUNTY PUD NO. 1
MANZANITA RESERVOIR AND BOOSTER PUMP STATION
1681 E McREAVY RD
UNION, WA

No.	DATE	REVISION

ISSUED FOR:	BID SET
ISSUE DATE:	APRIL 2025
APPROVED BY:	MBJ
CHECKED BY:	SLG
DRAWN BY:	JPW
DESIGNER:	SLG
G & O JOB NO.:	22260.00
FILE:	M_RESDET.DWG

0 1" 2"
TWO INCHES AT FULL SCALE. IF NOT, SCALE ACCORDINGLY

MECHANICAL

SCHEDULE A
RESERVOIR DETAILS

DRAWING: **M2-5** OF: **6**

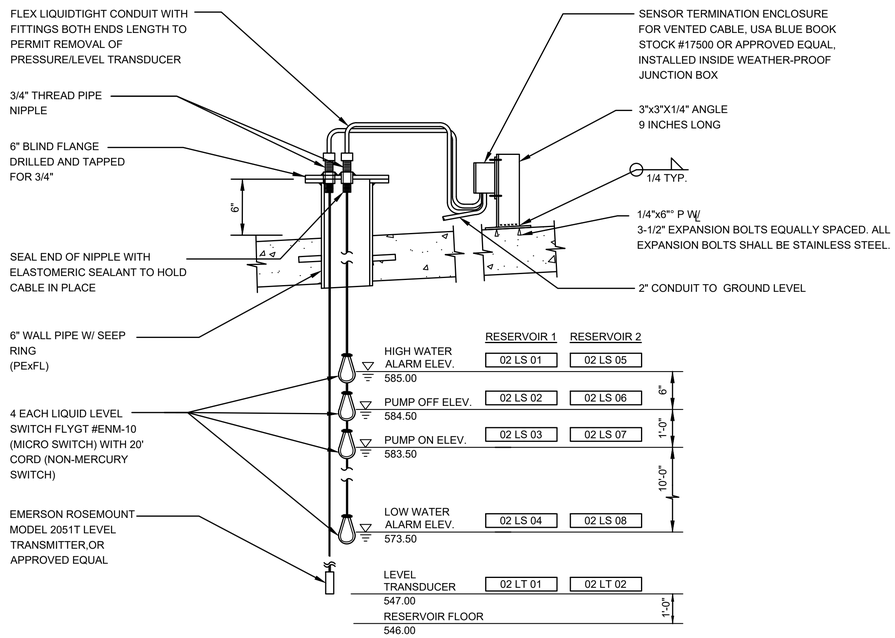

1 / M2-2 **LEVEL CONTROL**
NOT TO SCALE

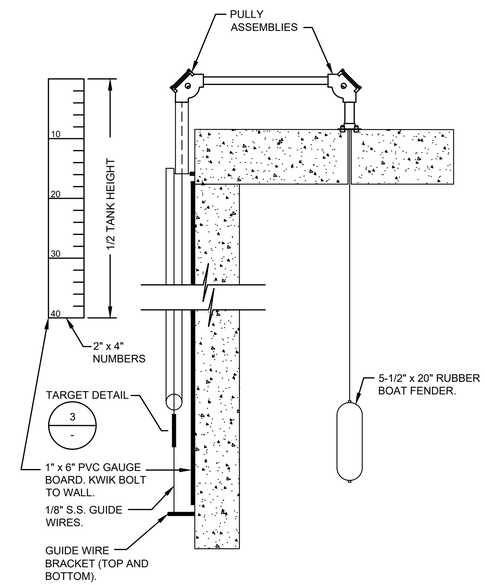

2 / M2-2 **LIQUID LEVEL INDICATOR**
NOT TO SCALE

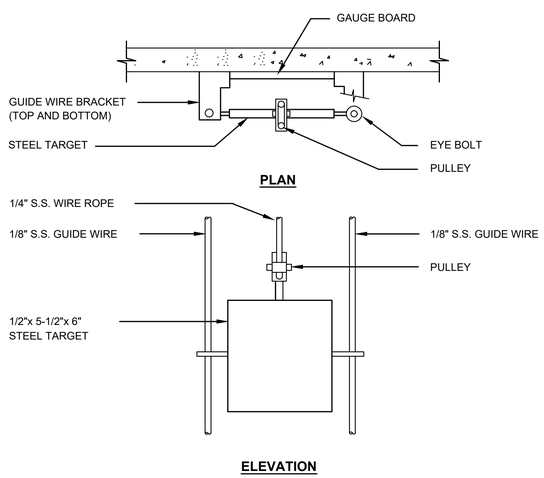

3 / - **TARGET DETAIL**
NOT TO SCALE

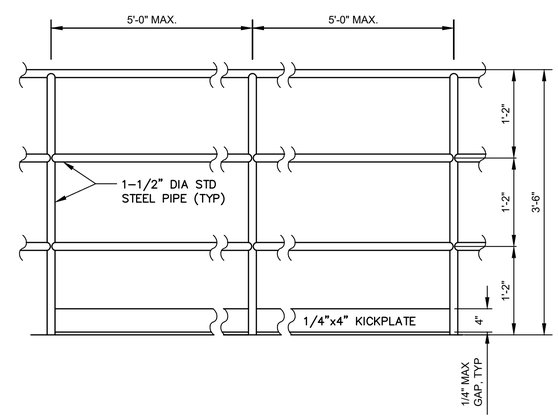

4 / - **GUARDRAIL**
SCALE: 1/2"=1'-0"

Gray & Osborne, Inc.
CONSULTING ENGINEERS
2102 CARRIAGE DRIVE SW, BUILDING I
OLYMPIA, WA 98502
(360) 292-7481

MICHAEL B. JOHNSON
STATE OF WASHINGTON
36498
REGISTERED PROFESSIONAL ENGINEER
4/7/25

MASON COUNTY PUD

MASON COUNTY PUD NO. 1
MANZANITA RESERVOIR AND BOOSTER PUMP STATION
1681 E McREAVY RD
UNION, WA

No.	DATE	REVISION

ISSUED FOR:	BID SET
ISSUE DATE:	APRIL 2025
APPROVED BY:	MBJ
CHECKED BY:	SLG
DRAWN BY:	JPW
DESIGNER:	SLG
G & O JOB NO.:	22260.00
FILE:	M_RESDET.DWG

0 1" 2"
TWO INCHES AT FULL SCALE.
IF NOT, SCALE ACCORDINGLY

MECHANICAL

SCHEDULE A
RESERVOIR DETAILS

DRAWING: **M2-6** OF: **6**

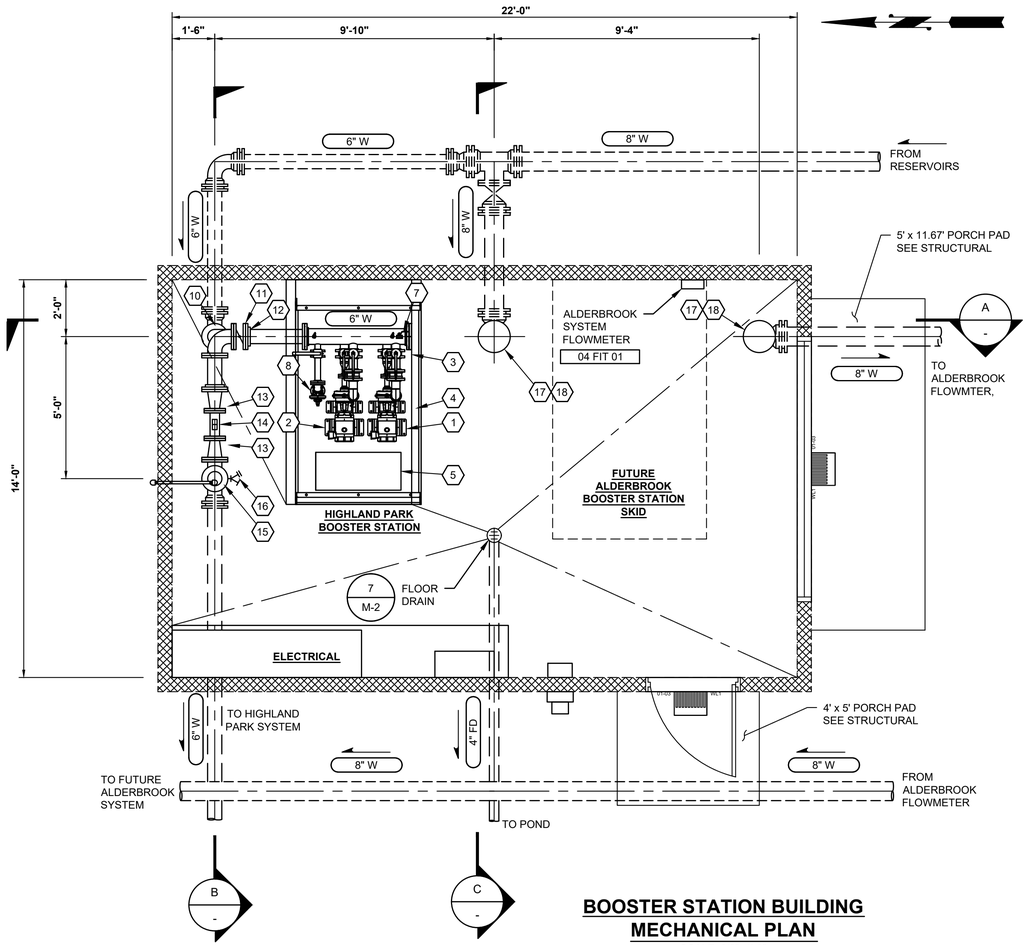

BOOSTER STATION BUILDING MECHANICAL PLAN

SCALE: 3/8"=1'-0"

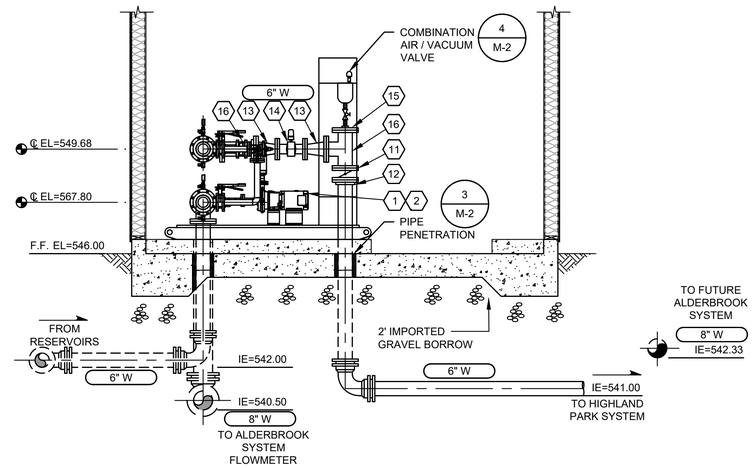

SECTION

SCALE: 3/8"=1'-0"

CONSTRUCTION NOTES:

1	HIGHLAND PARK PUMP NO. 1*	03 BP 01	
2	HIGHLAND PARK PUMP NO. 2*	03 BP 02	
3	BUTTERFLY VALVE, TYP. *		
4	CHECK VALVE, TYP.*	03 V 01	03 V 02
5	CONTROL PANEL *	03 CP 01	
6	PRESSURE GAUGE AND TRANSDUCER TYP. *	03 PG 01	03 PT 01
7	PRESSURE GAUGE AND TRANSDUCER TYP. *	03 PG 02	03 PT 02
8	2" PRESSURE RELIEF VALVE*	03 PRV 01	
9	6" BLIND FLANGE *		
10	6" 90° DI BEND (FLXFL)		
11	6" BUTTERFLY VALVE, TYP.		
12	6" UNI-FLANGE		
13	6"X4" REDUCER (FLXFL)		
14	4" MAGNETIC FLOW METER	03 FE/FIT 01	
15	6" DI TEE (FLXFL)		
16	SAMPLE TAP IN 3/4" THD BOSS		
17	8" BLIND FLANGE		
18	8" 90° BEND (MJXMJ)		

* DENOTES COMPONENTS OF PACKAGE PUMP STATION

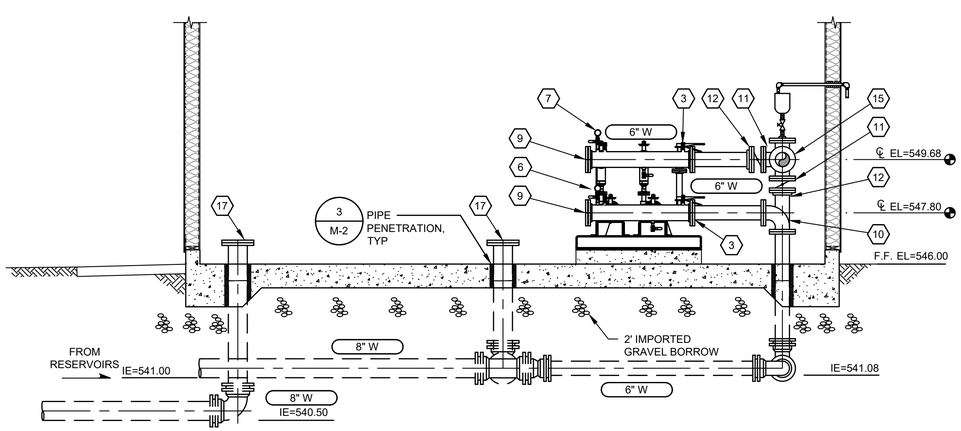

SECTION

SCALE: 3/8"=1'-0"

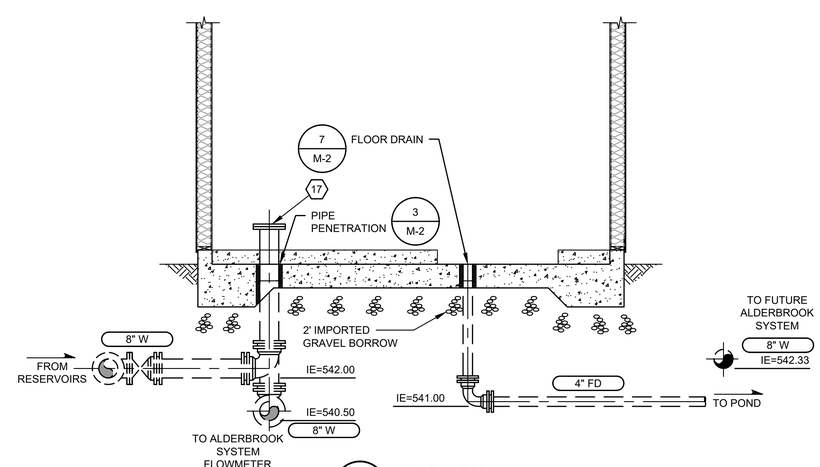

SECTION

SCALE: 3/8"=1'-0"

Gray & Osborne, Inc.
CONSULTING ENGINEERS
2102 CARRIAGE DRIVE SW, BUILDING I
OLYMPIA, WA 98502
(360) 292-7481

MICHAEL B. JOHNSON — STATE OF WASHINGTON — 36498 — REGISTERED PROFESSIONAL ENGINEER

4/7/25

MASON COUNTY PUD

MASON COUNTY PUD NO. 1
MANZANITA RESERVOIR AND BOOSTER PUMP STATION
1681 E McREAVY RD
UNION, WA

No.	DATE	REVISION

ISSUED FOR:	BID SET
ISSUE DATE:	APRIL 2025
APPROVED BY:	MBJ
CHECKED BY:	SLG
DRAWN BY:	JPW
DESIGNER:	SLG
G & O JOB NO.:	22260.00
FILE:	M_PLAN.DWG

0 1" 2"
TWO INCHES AT FULL SCALE. IF NOT, SCALE ACCORDINGLY

MECHANICAL

SCHEDULE A BOOSTER PUMP STATION BUILDING PLAN

DRAWING: **M3-1** OF: **1**

GENERAL STRUCTURAL NOTES

GENERAL
THE GENERAL CONTRACTOR SHALL VERIFY ALL DIMENSIONS AND SITE CONDITIONS BEFORE STARTING WORK. THE ENGINEER SHALL BE NOTIFIED OF ANY DISCREPANCY. USE DETAIL MARKED "TYPICAL" WHEREVER APPLICABLE. CHANGES, OMISSIONS OR SUBSTITUTIONS ARE NOT PERMITTED WITHOUT WRITTEN APPROVAL OF THE ENGINEER. REFER TO THE SPECIFICATIONS FOR FURTHER REQUIREMENTS. DO NOT SCALE THE DRAWINGS.

ALL MATERIALS AND WORKMANSHIP SHALL CONFORM TO THE 2021 EDITION OF THE INTERNATIONAL BUILDING CODE.

THE DESIGN, ADEQUACY AND SAFETY OF ERECTION BRACING, SHORING, TEMPORARY SUPPORTS, ETC., IS THE SOLE RESPONSIBILITY OF THE CONTRACTOR, AND HAS NOT BEEN CONSIDERED BY THE ENGINEER OF RECORD. THE CONTRACTOR IS RESPONSIBLE FOR THE STABILITY OF THE STRUCTURE PRIOR TO ITS COMPLETION. THE CONTRACTOR SHALL PROVIDE THE NECESSARY BRACING TO PROVIDE STABILITY PRIOR TO THE COMPLETION OF THE STRUCTURE.

THE GENERAL NOTES APPLY TO ALL STRUCTURES UNLESS NOTED OTHERWISE (U.N.O.). LOCATION AND SIZE OF ANCHOR BOLTS FOR SPECIFIC EQUIPMENT SHALL BE SPECIFIED BY THE VENDOR. CONTRACTOR SHALL COORDINATE LOCATIONS OF STRUCTURAL OPENINGS, PENETRATIONS AND EMBEDDED ITEMS WITH THE MECHANICAL, ARCHITECTURAL, ELECTRICAL, PLUMBING AND VENTILATION SECTIONS OF THE DRAWINGS AND WITH SUPPLIERS AND SUBCONTRACTORS AS MAY BE REQUIRED.

SPECIAL INSPECTION & TESTING
SPECIAL INSPECTIONS SHALL MEET THE REQUIREMENTS OF IBC CHAPTER 17.
OBSERVE THE WORK ASSIGNED FOR CONFORMANCE WITH APPROVED DRAWINGS AND SPECIFICATIONS.

FURNISH INSPECTION REPORTS TO THE BUILDING OFFICIAL AND ENGINEER. DISCREPANCIES SHALL BE BROUGHT TO THE IMMEDIATE ATTENTION OF THE CONTRACTOR FOR CORRECTION; THEN, IF NOT CORRECTED, TO THE BUILDING OFFICIAL AND ENGINEER. SUBMIT A FINAL REPORT STATING THE WORK WAS IN CONFORMANCE WITH THE APPROVED DRAWINGS AND SPECIFICATIONS AND THE APPLICABLE WORKMANSHIP PROVISIONS OF IBC.

SPECIAL INSPECTION REQUIRED:
STEEL: IN ACCORDANCE WITH SECTION 1705.2 AND TABLE 1705.2.3
CONCRETE: IN ACCORDANCE WITH SECTION 1705.3 AND TABLE 1705.3
MASONRY: IN ACCORDANCE WITH SECTION 1705.4
WOOD: IN ACCORDANCE WITH SECTION 1705.5
SOIL: IN ACCORDANCE WITH SECTION 1705.6 AND TABLE 1705.6
DRIVEN DEEP FOUNDATION: IN ACCORDANCE WITH SECTION 1705.7 AND TABLE 1705.7
CAST-IN-PLACE DEEP FOUNDATION: IN ACCORDANCE WITH SECTION 1705.8 AND TABLE 1705.8

SHOP DRAWINGS
SHOP DRAWINGS, WHERE REQUIRED, SHALL BE CHECKED AND APPROVED BY THE GENERAL CONTRACTOR PRIOR TO SUBMITTING FOR ENGINEER REVIEW. SHOP DRAWINGS SHALL BE SUBMITTED TO THE ENGINEER FOR REVIEW OF DESIGN INTENT, PRIOR TO FABRICATION. GENERAL CONTRACTOR IS RESPONSIBLE FOR VERIFICATION AND COORDINATION OF DIMENSIONS AND DETAILS FOR EACH SUBCONTRACTOR.

DESIGN LOADS
ROOF SNOW LOAD:
DESIGN SNOW LOAD,Ps..... 25 PSF
GROUND SNOW LOAD,Pg..... 25 PSF
SNOW EXPOSURE FACTOR, Ce..... 1
SNOW LOAD IMPORTANCE FACTOR, Is..... 1.2
THERMAL FACTOR, Ct..... 1.2

WIND DESIGN DATA:
ULTIMATE WIND SPEED (3-SECOND GUST), Vult..... 107 MPH
NOMINAL WIND SPEED, Vasd..... 83 MPH
RISK CATEGORY..... IV
WIND EXPOSURE..... C

EARTHQUAKE DESIGN DATA
MAPPED SPECTRAL RESPONSE
ACCELERATIONS
Ss..... 1.558g
S1..... 0.581g
SITE CLASS..... C
SPECTRAL RESPONSE COEFFICIENT
Sds..... 1.247g
Sd1..... 0.550g
SEISMIC IMPORTANCE FACTOR, Ie..... 1.5
RISK CATEGORY..... IV
SEISMIC DESIGN CATEGORY..... D
BASIC SEISMIC-FORCE-RESISTING SYSTEM(S)..... LIGHT FRAME (WOOD) WALLS WITH STRUCTURAL WOOD SHEAR PANELS
BASIC SEISMIC-FORCE-RESISTING SYSTEM(S)..... EQUIVALENT LATERAL-FORCE ANALYSIS

DESIGN BASE SHEAR..... 3.0 KIPS
SEISMIC RESPONSE COEFFICIENT(S), Cs..... 0.267
RESPONSE MODIFICATION FACTOR(S), R..... 7

FOUNDATION DATA PER GEOTECHNICAL REPORT BY GEO ENGINEERS, INC. DATED JUNE 7, 2022

ALLOWABLE BEARING PRESSURE:.....5000 PSF

ABOVE ARE ASSUMED PER DATA PROVIDED,
CONTRACTOR MUST VERIFY IN FIELD.

EXTEND ALL EXTERIOR FOOTINGS 2'-0" MINIMUM BELOW FINISHED GRADE. UNO (UNLESS NOTED OTHERWISE), BOTTOM OF ALL FOOTINGS TO BEAR ON 12" COMPACTED CSBC OVER NATIVE, INORGANIC, UNDISTURBED SOIL. NO FOOTING SHALL BEAR HIGHER THAN 1 VERTICAL TO 1.5 HORIZONTAL SLOPE ABOVE ANY EXCAVATION, EXISTING OR PLANNED. CONTRACTOR SHALL PROVIDE TEMPORARY SHORING TO PREVENT MOVEMENT OF WALLS IF BACKFILL IS PLACED BEFORE FLOOR SYSTEM IS IN PLACE. THERE SHALL BE 95% COMPACTION (ASTM D1557 MODIFIED PROCTOR DENSITY) OF ALL BACKFILL SOIL UNDER SLABS ON GRADE.

CAST-IN-PLACE CONCRETE
CONCRETE SHALL HAVE THE FOLLOWING PROPERTIES:
28-DAY STRENGTH f'c=4,000 PSI
AIR ENTRAINMENT: 5%-7%
WATER CONTAINMENT STRUCTURES: f'c=4,000 PSI @ 28 DAYS
ALL OTHER STRUCTURES: f'c=3,500 PSI @ 28 DAYS
MAXIMUM SLUMP: 3" FOR SLABS FOOTINGS, 4" FOR WALLS, COLUMNS AND BEAMS. CONSTRUCTION TO BE IN ACCORDANCE WITH ACI 318.

SUBMIT MIX DESIGN FOR REVIEW AND PROVIDE NOT LESS THAN 6 SACKS OF CEMENT PER CUBIC YARD FOR ALL CONCRETE WITH MAXIMUM W/C=0.45.

REINFORCING STEEL
WELDED WIRE FABRIC (W.W.F.): ASTM A82 AND A185
DEFORMED BARS: ASTM A615, GRADE 60 (GRADE 40 FOR #3).
UNLESS OTHERWISE NOTED ON THESE DRAWINGS, MINIMUM CONCRETE COVER FOR REINFORCING BARS SHALL BE AS FOLLOWS:
CONCRETE CAST AGAINST SOIL=3".
FORMED CONCRETE AGAINST SOIL=2".
WALLS, COLUMNS AND BEAMS EXPOSED TO WATER, SEWAGE & WEATHER=2".
WALLS, COLUMNS AND BEAMS DRY CONDITION=1 1/2".

PROVIDE 2-#5 MIN. U.N.O. TRIM BARS AROUND ALL OPENINGS IN CONCRETE WALLS OR SLAB EXTENDING 2'-6" PAST CORNERS, TYP. AT TIME OF CONCRETE PLACEMENT, REINFORCING SHALL BE FREE OF MUD, OIL, OR OTHER NONMETALLIC COATINGS THAT MAY DECREASE BOND.

WELDING OF REINFORCING BARS SHALL CONFORM TO ANSI/AWS D1.4.
WHERE PERMITTED, LOW HYDROGEN WELDING RODS SHALL BE USED FOR ALL WELDING OF REINFORCING BARS. SPECIAL INSPECTION IS REQUIRED FOR ALL FIELD WELDING.

SUBMIT SHOP DRAWINGS OF REINFORCING STEEL FOR REVIEW BY THE ENGINEER PRIOR TO FABRICATION. REINFORCING SHALL BE DETAILED IN ACCORDANCE WITH ACI 315 AND 318 (LATEST EDITION).

WOOD
ROOF SHEATHING SHALL BE 5/8" (NOMINAL) MIN. U.N.O. APA RATED SHEATHING 24/0, EXPOSURE 1, SIZED FOR SPACING. INSTALL PANELS WITH 1/4" SPACING AT END JOINTS AND 1/8" SPACING AT EDGE JOINTS MIN. INSTALL PLYWOOD SHEATHING WITH FACE GRAIN PERPENDICULAR TO SUPPORTS.

SAWN LUMBER: HEM-FIR #1 OR BETTER, U.N.O. WWPA GRADING RULES. ALL DIMENSIONS NOTED ARE NOMINAL. WOOD BEARING ON OR WITHIN 1" OF CONCRETE OR CMU OR WITHIN 6" OF EARTH SHALL BE TREATED WITH AN APPROVED PRESERVATIVE. ALL NAILS ARE TO BE "COMMON." ALL NAILS IN TREATED TIMBER SHALL BE GALVANIZED. ALL FRAMING CONNECTORS NOTED ARE PER SIMPSON STRONG TIE COMPANY INC. OR ENGINEER APPROVED EQUAL. SEE MANUFACTURER'S REQUIREMENTS.

TREATED LUMBER SHALL BE BRANDED WITH A QUALITY CONTROL AGENCY MARK BY AMERICAN WOOD PROTECTION ASSOCIATION.

GLUE-LAMINATED MEMBERS:
SIMPLE SPAN BEAMS: 24F-V4.
CONTINUOUS OR CANTILEVER BEAMS: 24F-V8.
COMPRESSION MEMBERS: 2.
TENSION MEMBERS: 3.

GLUE-LAMINATED MEMBERS SHALL CONFORM TO THE LATEST EDITION OF AITC 117, "DESIGN STANDARD SPECIFICATIONS FOR STRUCTURAL GLUED LAMINATED TIMBER OF SOFTWOOD SPECIES." SHOP DRAWINGS OF GLUE-LAMINATED MEMBERS TO BE SUBMITTED FOR REVIEW BY THE ENGINEER PRIOR TO FABRICATION. FRAMING ANCHORS AND CONNECTORS: SIMPSON OR APPROVED EQUAL AS INDICATED ON DRAWINGS. INSTALL PER MANUFACTURER'S RECOMMENDATIONS. FOR NAILING NOT SHOWN ON DRAWINGS, USE IBC NAILING SCHEDULE, TABLE NO. 2304.10.1. ALL WOOD BEARING ON CONCRETE OR MASONRY, IF LESS THAN 4'-0" ABOVE GRADE, SHALL BE PRESSURE TREATED DOUGLAS FIR. STRUCTURAL MEMBERS SHALL NOT BE CUT FOR PIPES, ETC., UNLESS SPECIFICALLY NOTED OR DETAILED.

PREFABRICATED WOOD TRUSSES
ROOF TRUSSES SHALL BE DESIGNED BY THE CERTIFIED MANUFACTURER FOR THE SPANS AND CONDITIONS SHOWN ON THE DRAWINGS AND THE LOADS LISTED BELOW.
MAXIMUM TRUSS SPACING: 24" O.C.

TRUSS LOADING UNLESS NOTED OTHERWISE ON DRAWINGS:
TOP CHORD LIVE LOAD=25 PSF.
TOP CHORD DEAD LOAD=5 PSF.
BOTTOM CHORD LIVE LOAD=10 PSF.
BOTTOM CHORD DEAD LOAD=10 PSF.
PER IBC, UNINHABITABLE ATTICS SHALL BE DESIGNED FOR A LIVE LOAD OF 10 PSF.
ADDITIONAL LIVE LOAD: SNOW LOAD DUE TO DRIFTING SHALL BE INCLUDED AS SPECIFIED ON THE DRAWINGS.

TRUSSES TO BE FABRICATED BY A CERTIFIED MEMBER OF THE TRUSS PLATE INSTITUTE. DESIGN, FABRICATION AND ERECTION TO CONFORM TO THE TRUSS PLATE INSTITUTE STANDARDS. CONNECTOR PLATES SHALL BE ICC APPROVED WITH A MINIMUM SIZE OF 3"x5". ALL CHORD MEMBERS SHALL HAVE LUMBER GRADE STAMPS; ALL WEB MEMBERS SHALL HAVE GRADE STAMPS OR ALL WEB MEMBERS, FOR A GIVEN TRUSS, SHALL BE MADE FROM THE SAME LUMBER GRADE WITH AT LEAST 50% OF THE WEB MEMBERS BEARING A GRADE STAMP. TRUSS DESIGNS AND ERECTION PLANS SHALL BE BY A PROFESSIONAL ENGINEER REGISTERED IN THE STATE OF WASHINGTON. ERECTION PLANS SHALL SHOW TRUSS SPACING, TRUSS MARK NUMBERS (CORRESPONDING TO THE DESIGN CALCULATIONS), CONCENTRATED LOADS, PERMANENT INDIVIDUAL TRUSS MEMBER RESTRAINT PER IBC SECTION 2303.4.1.2 AS REQUIRED BY THE TRUSS DESIGN AND ERECTION BRACING. SHOP DRAWING SHALL INCLUDE, FOR EACH TYPE OF TRUSS, DIMENSIONS AND CONFIGURATIONS, NOMINAL LUMBER SIZE AND GRADE, SPECIFICATIONS FOR CONNECTOR PLATE USED, SIZE AND LOCATION OF EACH CONNECTOR AT EACH JOINT AND AMOUNT OF CAMBER IF REQUIRED. DESIGN CALCULATIONS, SHOP DRAWINGS AND ERECTION PLANS SHALL BE SUBMITTED FOR REVIEW BY THE ENGINEER PRIOR TO FABRICATION.

REINF	LAP
#4	2'-4"
#5	3'-0"
#6	3'-6"
#7	4'-3"
#8	4'-10"
#9	5'-3"
#10	6'-6"
#11	8'-0"

1 / TYP **TYP LAP SCHEDULE**
NOT TO SCALE

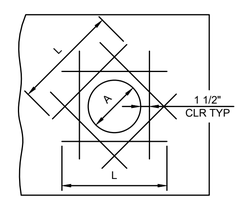

TYPE I

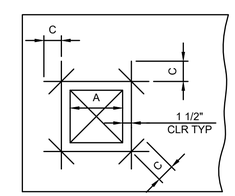

TYPE II

TYPE I			TYPE II	
OPENING SIZE (A)	MINIMUM BAR LENGTH (L)	BAR SIZE	(C)	BAR SIZE
0" - 12"	3' - 9"	#5	1' - 0"	MATCH VERTICAL BARS OR LARGEST BAR IN SLABS OR WALKWAYS
13" - 18"	4' - 9"	#6	1' - 3"	
19" - 24"	6' - 9"	MATCH VERTICAL BARS OR LARGEST BAR IN SLABS OR WALKWAYS	2' - 6"	
25" - 36"	7' - 9"		2' - 6"	
36" →	8' - 9"		2' - 6"	

NOTE:
1. ALL BARS, EACH FACE. USE THESE BAR SIZES UNLESS OTHERWISE NOTED.

2 / TYP **TYP PENETRATION REINFORCING DETAIL**
NOT TO SCALE

Gray & Osborne, Inc.
CONSULTING ENGINEERS
2102 CARRIAGE DRIVE SW,
BUILDING I
OLYMPIA, WA 98502
(360) 292-7481

MYRON J. BASSEN
STATE OF WASHINGTON
46334
STRUCTURAL ENGINEER
PROFESSIONAL ENGINEER
4/1/2025

MASON COUNTY PUD

MASON COUNTY PUD NO. 1
MANZANITA RESERVOIR AND BOOSTER PUMP STATION
1681 E McREAVY RD
UNION, WA

No.	DATE	REVISION

ISSUED FOR:	BID SET
ISSUE DATE:	APRIL 2025
APPROVED BY:	MJB
CHECKED BY:	PTG
DRAWN BY:	JPW
DESIGNER:	PTG
G & O JOB NO.:	22260.00
FILE:	S_GEN NOTES.DWG

0 1" 2"
TWO INCHES AT FULL SCALE.
IF NOT, SCALE ACCORDINGLY

STRUCTURAL

SCHEDULE A
GENERAL STRUCTURAL NOTES AND TYPICAL DETAILS

DRAWING: **S-1** OF: **3**

SPECIAL INSPECTION SCHEDULE

VERIFICATION AND INSPECTION	CI	PI	REMARKS/REFERENCES
CONCRETE:			
REINFORCING STEEL INCLUDING PLACEMENT	-	X	ACI 318: CH 20, 25.2, 25.3, 26.6.1-26.6.3
ANCHOR RODS, EMBEDDED BOLTS AND INSERTS	X	-	PRIOR TO AND DURING PLACEMENT OF CONCRETE
USE OF REQUIRED DESIGN MIX	-	X	ACI 318: CH. 19, 26.4.3, 26.4.4
CONCRETE SLUMP, AIR CONTENT, TEMPERATURE AND TEST SPECIMENS	X	-	WHILE MAKING SPECIMENS FOR STRENGTH TESTS
CONCRETE AND SHOTCRETE PLACEMENT	X	-	ACI 318: 26.5
CONCRETE CURING	-	X	ACI 318: 26.5.3-26.5.5
CONCRETE FORMWORK FOR SHAPE, LOCATIONS AND DIMENSIONS	-	X	ACI 318: 26.11.1.2(6)
SOILS:			
VERIFY DESIGN BEARING CAPACITY	-	X	
VERIFY EXCAVATIONS	-	X	
CLASSIFICATION AND TESTING OF COMPACTED FILL MATERIALS	-	X	
USE OF MATERIALS, DENSITIES AND LIFT THICKNESSES	X	-	DURING PLACEMENT AND COMPACTION
OBSERVE SUBGRADE AND SITE PREPARED PROPERLY	-	X	PRIOR TO PLACEMENT OF COMPACTED FILL
WOOD:			
TYPE AND SPACING OF STRUCTURAL PANEL NAILING	-	X	IBC 1705.11.3
TYPE AND INSTALLATION OF TRUSS SEISMIC TIES	-	X	

INSPECTION SCHEDULE NOTES

1. ITEMS MARKED WITH AN "X" REQUIRE INSPECTION BY A SPECIAL INSPECTOR APPROVED BY THE BUILDING OFFICIAL.
2. ITEMS MARKED "NA" ARE NOT APPLICABLE TO THIS PROJECT.
3. CI = CONTINUOUS INSPECTION DURING PROGRESS OF WORK BY SPECIAL INSPECTOR.
4. PI = PERIODIC INSPECTION BY SPECIAL INSPECTOR AS REQUIRED TO CONFIRM CONFORMANCE OF WORK.
5. TESTING AND INSPECTION REPORTS SHALL BE SUBMITTED TO THE ENGINEER, BUILDING OFFICIAL AND CONTRACTOR.
6. CONTRACTOR WILL CONTRACT FOR SPECIAL INSPECTION SERVICES.

SUPPLEMENTAL STRUCTURAL ABBREVIATIONS:

ABV	ABOVE
AFF	ABOVE FINISH FLOOR
ADD'L	ADDITIONAL
ADJ	ADJACENT
AL	ALUMINUM
APPRX	APPROXIMATE
ARCH	ARCHITECTURAL
@	AT
BEL	BELOW
BF	BRACED FRAME
BM	BEAM
BN	BOUNDRY NAIL
BNDRY	BOUNDRY
BO	BOTTOM OF
BOS	BOTTOM OF SLAB
BOT	BOTTOM
BRDG	BRIDGE(ING)
BRG	BEARING
CAM	CAMBER(ED)
CANT	CANTILEVER(ED)
CDF	CONTROLLED DENSITY FILL
CG	CENTER OF GRAVITY
CIP	CAST IN PLACE
CJ	CONTROL JOINT
CJP	COMPLETE JOINT PENETRATION
COL	COLUMN
CONST	CONSTRUCTION
CONT	CONTINUOUS
CTSK	COUNTERSINK
D	DEPTH
d	PENNY (NAILS)
DBL	DOUBLE
DF	DOUGLAS FIR
DIAG	DIAGONAL
DIAPH	DIAPHRAGM
do	DITTO (DO OVER)
DWG	DRAWING
DWL	DOWEL
EA	EACH
EF	EACH FACE
EJ	EXPANSION JOINT
EMBD	EMBED(MENT)
EN	EDGE NAIL
ENG	ENGINEER
EQ	EQUAL
ES	EACH SIDE
EXIST	EXISTING MEMBER
EXT	EXTERIOR
FFE	FINISHED FLOOR ELEVATION
FN	FACE NAIL
FND	FOUNDATION
FO	FACE OF
FRM'G	FRAMING
FS	FAR SIDE
FTG	FOOTING
GA	GAUGE
GB	GRADE BEAM
GLB	GLUE-LAMINATED BEAM
HAS	HEADER ANCHOR STUDS
HDR	HEADER
HF	HEM-FIR
HGR	HANGER
HSB	HIGH STRENGTH BOLT (A325 UNO)
HSS	HOLLOW STRUCTURAL STEEL
IBC	INTERNATIONAL BUILDING CODE
IF	INSIDE FACE
INT	INTERIOR
JST	JOIST
K	KIPS (1000 POUNDS)
LAT	LATERAL
LDGR	LEDGER
LLH	LONG LEG HORIZONTAL
LLV	LONG LEG VERTICAL
LS	LAG SCREW
LSL	LAMINATED STRAND LUMBER
LT WT	LIGHT WEIGHT
LVL	LAMINATED VENEER LUMBER
MAS	MASONRY
MAT'L	MATERIAL
MB	MACHINE BOLT (A307)
MFR	MANUFACTURER
MRF	MOMENT RESISTING FRAME
MTL	METAL
(N)	NEW MEMBER
NS	NEAR SIDE
OH	OVERHANG
ORNT	ORIENTATE (ION)
PAR	PARALLEL
P/C	PRECAST CONCRETE
PERP	PERPENDICULAR
PSL	PARALLEL STRAND LUMBER
PT	PRESSURE TREAT(ED)
P/T	POST TENSIONED
QTY	QUANTITY
REF	REFERENCE
REINF	REINFORCEMENT
SHT	SHEET
SHTG	SHEATHING
SIM	SIMILAR
SKW	SKEW(ED)
SPC	SPACING
SS	STAINLESS STEEL
STGR	STAGGER
STIFF	STIFFENER
STIRR	STIRRUP
STRUC	STRUCTURE(AL)
SYM	SYMMETRICAL
T	TOP
T&G	TONGUE AND GROOVE
TMPRY	TEMPORARY
TN	TOE NAIL
TO	TOP OF
TOS	TOP OF SLAB
TRANS	TRANSVERSE
TYP	TYPICAL
UNO	UNLESS NOTED OTHERWISE
VFY	VERIFY
WHS	WELDED HEADED STUD
WP	WORK POINT
WS	WESTERN SPECIES
WTS	WELDED THREADED STUD
X-STG	EXTRA STRONG
XX-STG	DOUBLE EXTRA STRONG

STRUCTURAL LEGEND

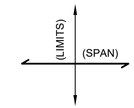

GRATING OR STRUCTURAL SPAN

DIFFERENCE IN ELEVATIONS

ELEVATION TARGET (REF.)

HANDRAILING

REMOVABLE HANDRAIL

℄ CENTERLINE

PL PLATE

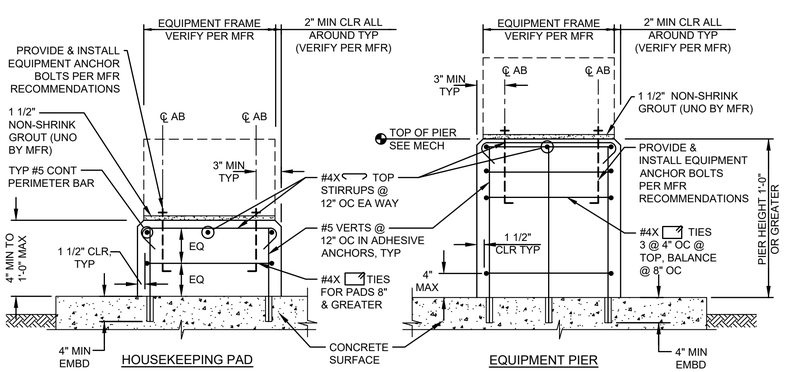

NOTES:

1. CHAMFER ALL EXPOSED CORNERS OF HOUSEKEEPING PADS AND EQUIPMENT PIERS.
2. FOR PIER HEIGHT LESS THAN 1'-0" SEE HOUSEKEEPING PAD DETAIL

1 TYP — TYP HOUSEKEEPING PAD & EQUIPMENT PIER DETAILS

NOT TO SCALE

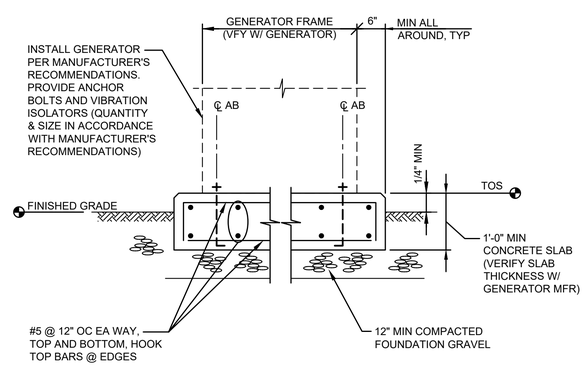

2 TYP — TYP GENERATOR PAD DETAIL

NOT TO SCALE

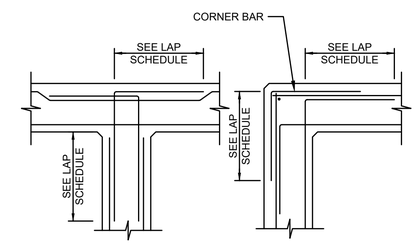

DOUBLE CURTAIN

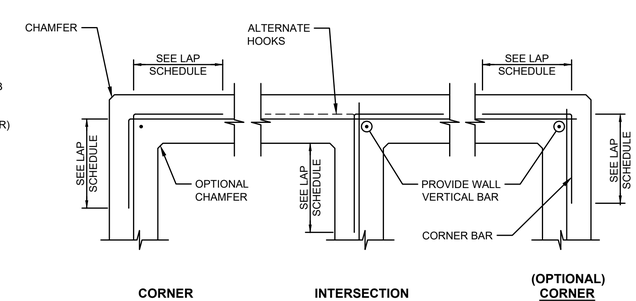

SINGLE CURTAIN

3 TYP — TYP REINFORCING @ WALL INTERSECTION DETAIL

NOT TO SCALE

Gray & Osborne, Inc.
CONSULTING ENGINEERS
2102 CARRIAGE DRIVE SW, BUILDING I
OLYMPIA, WA 98502
(360) 292-7481

MYRON J. BASDEN — STATE OF WASHINGTON — 46334 — STRUCTURAL ENGINEER — PROFESSIONAL ENGINEER
4/1/2025

MASON COUNTY PUD NO. 1
MANZANITA RESERVOIR AND BOOSTER PUMP STATION
1681 E McREAVY RD
UNION, WA

No.	DATE	REVISION

ISSUED FOR:	BID SET
ISSUE DATE:	APRIL 2025
APPROVED BY:	MJB
CHECKED BY:	PTG
DRAWN BY:	JPW
DESIGNER:	PTG
G & O JOB NO.:	22260.00
FILE:	S_DETAILS.DWG

0 1" 2"
TWO INCHES AT FULL SCALE. IF NOT, SCALE ACCORDINGLY

STRUCTURAL

SCHEDULE A
TYPICAL STRUCTURAL DETAILS

DRAWING: **S-2** OF: **3**

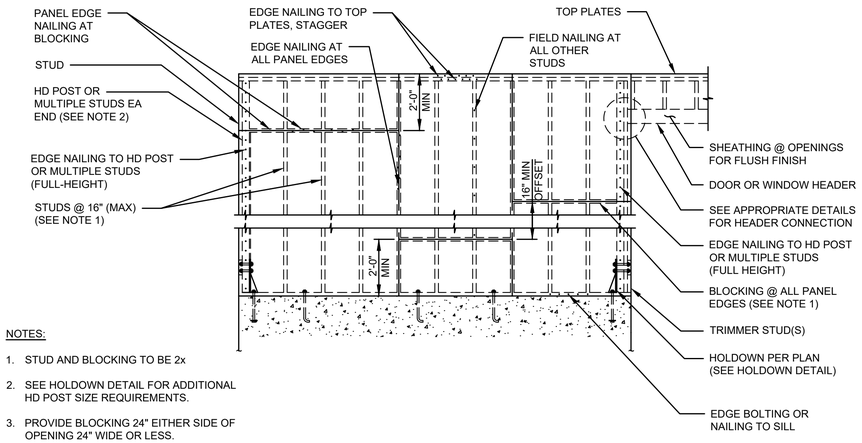

NOTES:

1. STUD AND BLOCKING TO BE 2x
2. SEE HOLDOWN DETAIL FOR ADDITIONAL HD POST SIZE REQUIREMENTS.
3. PROVIDE BLOCKING 24" EITHER SIDE OF OPENING 24" WIDE OR LESS.
4. USE COMMON WIRE NAILS FOR ALL STRUCTURAL SHEATHING.

1 TYP **SHEAR WALL TYPES I AND II**
NOT TO SCALE

SHEAR WALL NOTES:

1. O.S. INDICATES SHEATHING ON ONE SIDE OF WALL AS SHOWN ON PLANS.

   B.S. INDICATES SHEATHING ON BOTH SIDES OF WALL.

   L.S. INDICATES LAG SCREWS.
2. USE COMMON WIRE NAILS FOR ALL STRUCT. II SHEATHING. USE COOLER NAILS FOR ALL GYPBOARD SHEATHING AND #11 GAx1 3/4" LONG, 7/16" HEAD, DIAMOND POINT, GALV FOR GYPSUM SHEATHING.
3. SEE DETAIL ON THIS SHEET FOR SHEAR WALL ASSEMBLIES BASED ON SHEAR WALL TYPE.
4. FOR STAGGERED EDGE NAILING REQUIREMENTS SEE DETAIL ON THIS SHEET.
5. EXPANSION BOLTS MAY BE USED IN PLACE OF AB WITH PRIOR APPROVAL OF THE STRUCTURAL ENGINEER.
6. SIMPSON'S A35F MAY BE SUBSTITUTED FOR SIMPSON'S A35 AS REQUIRED.

SHEAR WALL SCHEDULE

SHEATHING (1)	NAIL SIZE (2)	EDGE NAIL SPACING	FIELD NAIL SPACING	SILL TO (5) WOOD CONN (3)	SILL TO WOOD CONN (2)	SHEAR TRANSFER CLIPS (7)	SHEAR WALL TYPE (3)
15/32" STRUC II O.S.	10d	6"	12"	3/4"Ø AB @ 48" OC	16d @ 4" OC	A35 CLIP @ 16" OC	I

2 TYP **SHEAR WALL SCHEDULE**
NOT TO SCALE

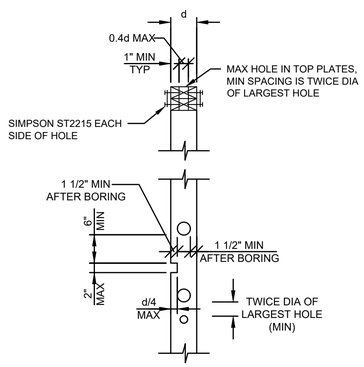

NOTE:

1. NOTCHING/CUTTING AND BORING OTHER THAN SHOWN REQUIRES PRIOR APPROVAL FROM STRUCTURAL ENGINEER.

3 TYP **TYP ALL BEARING & SHEAR WALLS FOR STUD NOTCHING/BOLTING & BORING**
SCALE: 3/4"=1'-0"

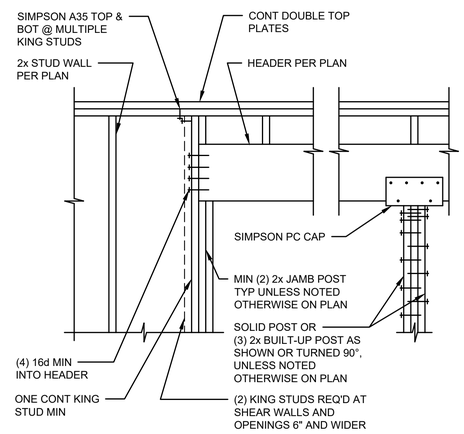

TYPICAL HEADER TABLE	
MAX SPAN	DESCRIPTION
4'-0"	(3)-2X6 TO WORK WITH NOMINAL 5½" STUDS
10'-0"	6¾"x10½" GLB

4 TYP **TYP HEADER DETAIL**
NOT TO SCALE

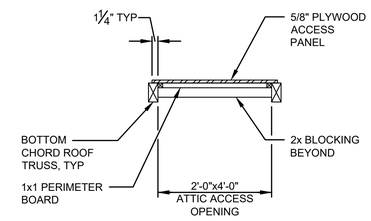

5 TYP **TYPICAL ATTIC ACCESS DETAIL**
SCALE: 3/4"=1'-0"

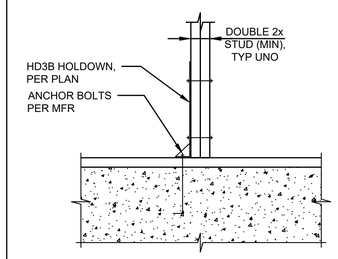

6 TYP **TYP HOLDOWN DETAIL**
SCALE: 3/4"=1'-0"

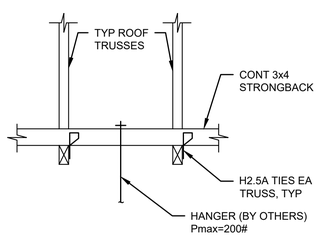

7 TYP **TYP MECHANICAL SUPPORT WOOD TRUSS**
NOT TO SCALE

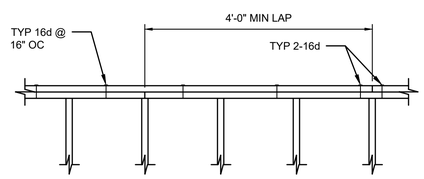

8 TYP **TYP MINIMUM DOUBLE PLATE LAT & NAILING DETAIL**
SCALE: 3/4"=1'-0"

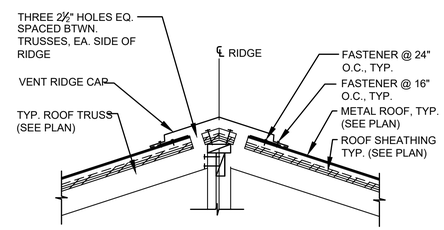

9 TYP **RIDGE VENT DETAIL**
NOT TO SCALE

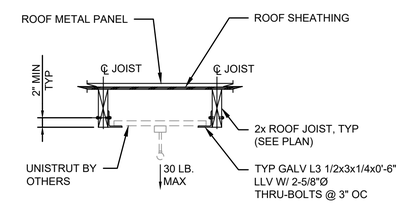

10 TYP **TYP LIGHTING FIXTURE MOUNTING DETAIL**
SCALE: 3/4" = 1'-0"

Gray & Osborne, Inc.
CONSULTING ENGINEERS
2102 CARRIAGE DRIVE SW, BUILDING I
OLYMPIA, WA 98502
(360) 292-7481

MYRON J. BASDEN — STATE OF WASHINGTON — 46334 — STRUCTURAL ENGINEER — PROFESSIONAL ENGINEER
4/1/2025

MASON COUNTY PUD NO. 1
MANZANITA RESERVOIR AND BOOSTER PUMP STATION
1681 E McREAVY RD
UNION, WA

No.	DATE	REVISION

ISSUED FOR:	BID SET
ISSUE DATE:	APRIL 2025
APPROVED BY:	MJB
CHECKED BY:	PTG
DRAWN BY:	JPW
DESIGNER:	PTG
G & O JOB NO.:	22260.00
FILE:	S_DETAILS.DWG

0 1" 2"
TWO INCHES AT FULL SCALE. IF NOT, SCALE ACCORDINGLY

STRUCTURAL

SCHEDULE A
TYPICAL STRUCTURAL DETAILS

DRAWING: **S-3** OF: **3**

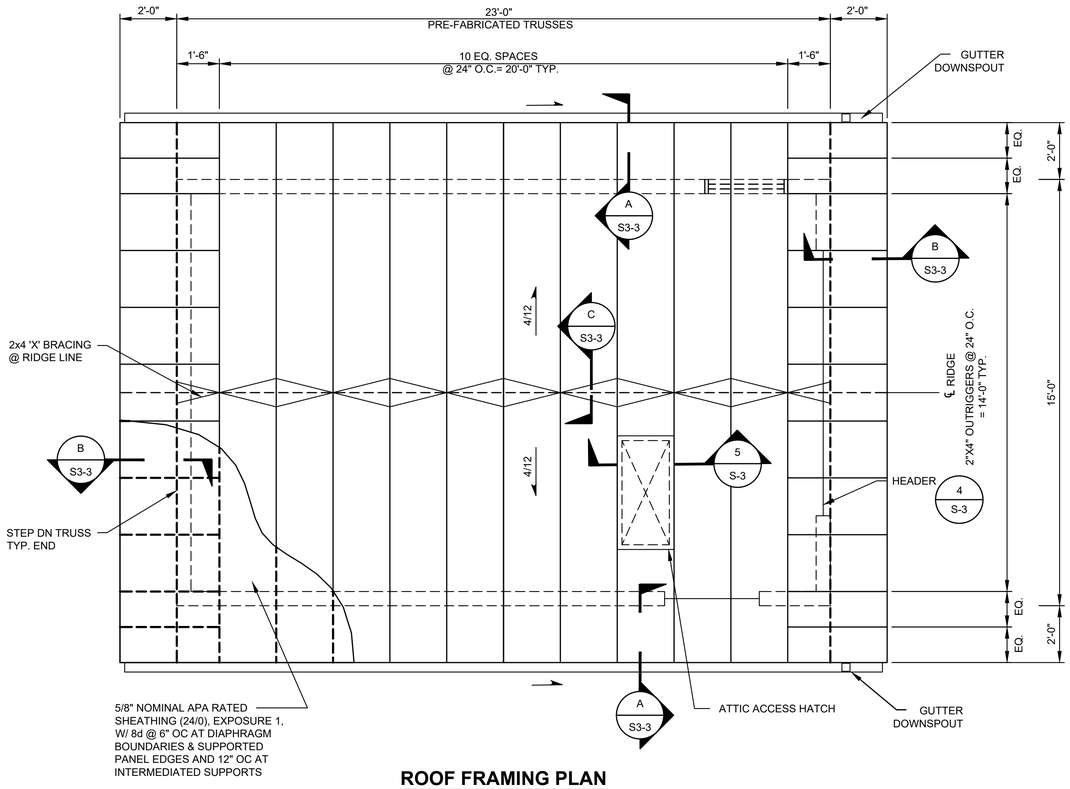

ROOF FRAMING PLAN

SCALE: 3/8"=1'-0"

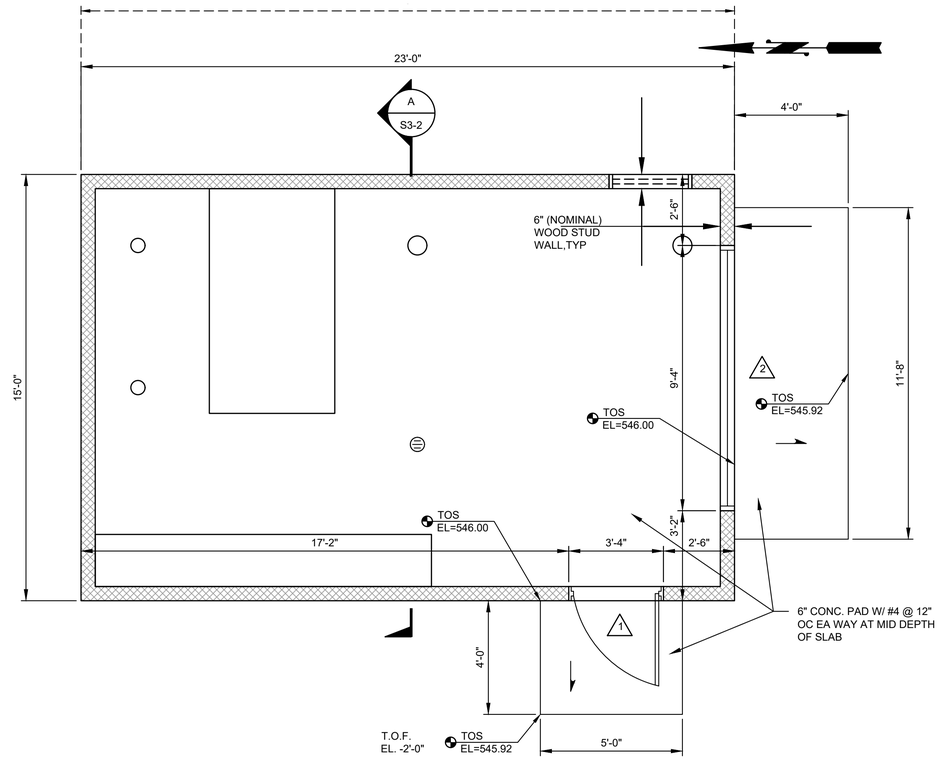

FLOOR PLAN

SCALE: 3/8"=1'-0"

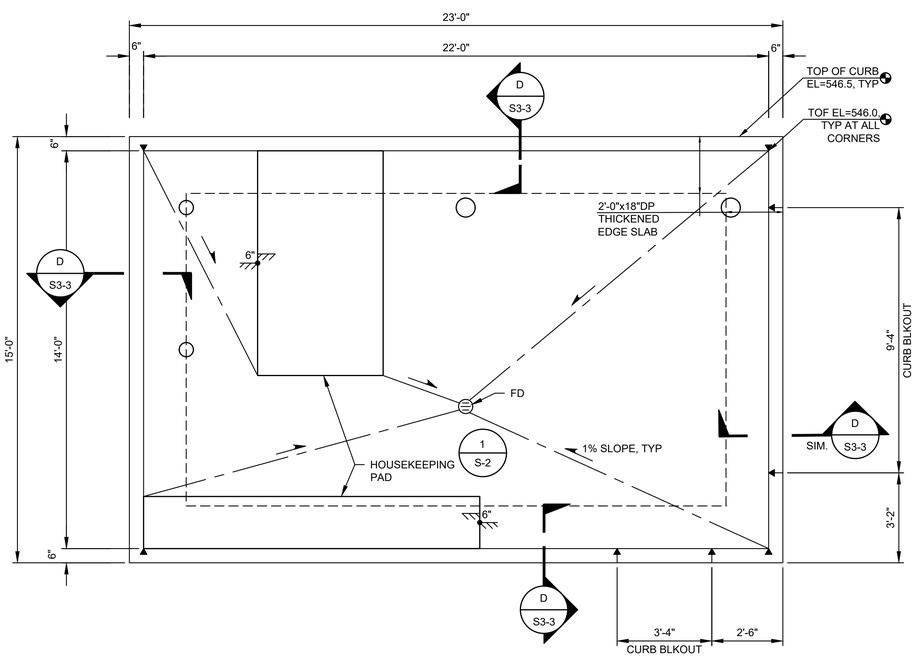

FOUNDATION PLAN

SCALE: 3/8"=1'-0"

PROJECT DATA

PROJECT DESCRIPTION:

A NEW ONE STORY WOOD FRAMED BUILDING WITH PRE MANUFACTURED WOOD ROOF TRUSSES, COMPOSITE ROOFING AND CONCRETE FOUNDATION.

BOOSTER PUMP STATION BUILDING:
23'-0" x 15'-0" = 345 SF

CODES:

2021 INTERNATIONAL BUILDING CODE

OCCUPANCY:

F FACTORY/INDUSTRIAL GROUP

TYPE OF CONSTRUCTION:

TYPE VB

WALL TYPES & LEGEND

2X6 STUD WALL

1 DOOR NUMBER, SEE DOOR SCHEDULE

NOTES:

1. SEE SHEETS S-1 THROUGH S-3 FOR GENERAL STRUCTURAL NOTES AND TYPICAL DETAILS.
2. "▼" DENOTES SHEAR WALL HOLD DOWN (6 / S-3).
3. X DENOTES SHEAR WALL MARK.
4. SEE (2 / S-3) FOR SHEAR WALL SCHEDULE.
5. ALL FRAMING HARDWARE SHALL BE MANUFACTURED BY SIMPSON STRONG TIE COMPANY, INC. UNLESS OTHERWISE APPROVED BY THE ENGINEER.
6. USE MINIMUM OF 3 STUDS AT ENDS OF SHEAR WALLS, TYP U.N.O.
7. DIMENSIONS SHOWN ON THE STRUCTURAL PLANS SHALL BE VERIFIED BY THE CONTRACTOR PRIOR TO THE START OF CONSTRUCTION. ANY DISCREPANCIES SHALL BE BROUGHT TO THE ATTENTION OF THE ENGINEER IMMEDIATELY.

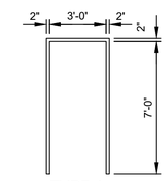

TYPE A

DOOR FRAME TYPE

SCALE: 1/4"=1'-0"

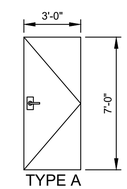

TYPE A

DOOR TYPE

SCALE: 1/4"=1'-0"

ROOM MATERIAL AND FINISH SCHEDULE

ROOM NAME	FLOOR		BASE		WALLS								CEILING	
					NORTH		SOUTH		EAST		WEST			
	MATL.	FINISH	MATL.	FINISH	MATL.	FINISH	MATL.	FINISH	MATL.	FINISH	MATL.	FINISH	MATL.	FINISH
ROOM 1	CONC	CSH	N/A	N/A	MP	PTS	MP	PTS	MP	PTS	MP	PTS	MP	PTS

CONC - CONCRETE
CMU - CONCRETE MASONRY UNIT
ESB - EXTERIOR SOFFIT BOARD
FF - FACTORY FINISH
CSH - CONCRETE SURFACE HARDENER
GWB - GYPSUM WALL BOARD
PTS - PAINT TO SPECIFICATIONS
VST - VINYL SHEET
MP - MARINE PLYWOOD

DOOR SCHEDULE

NO.	MATERIAL & TYPE	DOOR SIZE: WIDTH x HEIGHT x THICKNESS	DOOR TYPE	FRAME TYPE	FRAME GAUGE	FINISH	HARDWARE GROUP	DEFAULT U-FACTOR
1	HOLLOW METAL INSULATED	3'-0" x 7'-0" x 1 3/4"	A	A	16	PTS	1	0.34
2	COILING NON-MOTORIZED ROLL-UP DOOR	9'-4" x 7'-2"	FF	FF	-	FF	2	0.34

Gray & Osborne, Inc.
CONSULTING ENGINEERS
2102 CARRIAGE DRIVE SW,
BUILDING I
OLYMPIA, WA 98502
(360) 292-7481

MYRON J. BASSEN
STATE OF WASHINGTON
46334
STRUCTURAL ENGINEER
PROFESSIONAL ENGINEER
4/1/2025

MASON COUNTY PUD

MASON COUNTY PUD NO. 1
MANZANITA RESERVOIR AND BOOSTER PUMP STATION
1681 E McREAVY RD
UNION, WA

No.	DATE	REVISION

ISSUED FOR:	BID SET
ISSUE DATE:	APRIL 2025
APPROVED BY:	MJB
CHECKED BY:	PTG
DRAWN BY:	JPW
DESIGNER:	PTG
G & O JOB NO.:	22260.00
FILE:	S_FDN-FRM.DWG

0 1" 2"
TWO INCHES AT FULL SCALE.
IF NOT, SCALE ACCORDINGLY

STRUCTURAL

SCHEDULE A
BOOSTER STATION FOUNDATION, FLOOR AND ROOF FRAMING PLAN

DRAWING: **S3-1** OF: **3**

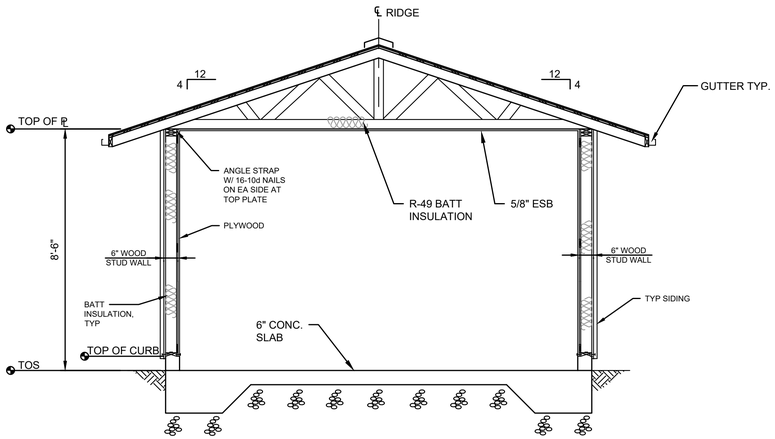

A
S-4

SECTION

SCALE: 3/8"=1'-0"

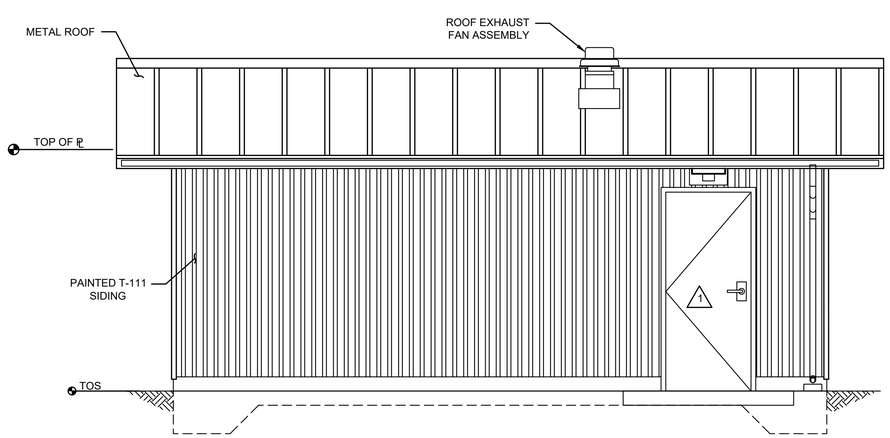

WEST ELEVATION (EAST SIM.)

SCALE: 3/8"=1'-0"

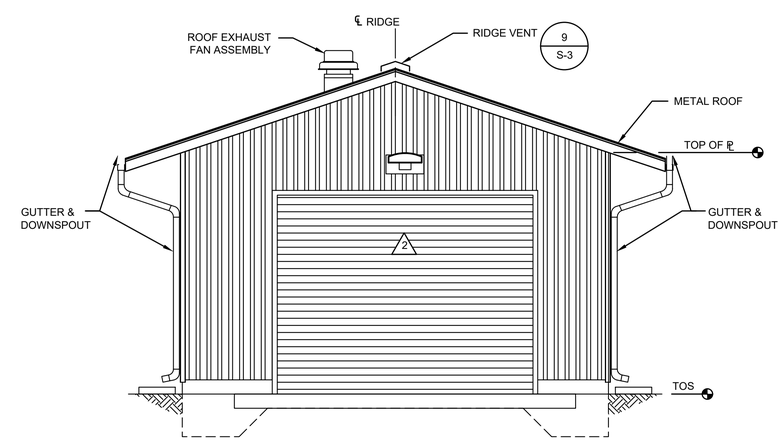

SOUTH ELEVATION (NORTH SIM.)

SCALE: 3/8"=1'-0"

Gray & Osborne, Inc.
CONSULTING ENGINEERS
2102 CARRIAGE DRIVE SW,
BUILDING I
OLYMPIA, WA 98502
(360) 292-7481

MYRON J. BASSEN
STATE OF WASHINGTON
46534
STRUCTURAL ENGINEER
PROFESSIONAL ENGINEER
4/1/2025

MASON COUNTY PUD

MASON COUNTY
PUD NO. 1
MANZANITA RESERVOIR AND BOOSTER PUMP STATION
1681 E McREAVY RD
UNION, WA

No.	DATE	REVISION

ISSUED FOR:	BID SET
ISSUE DATE:	APRIL 2025
APPROVED BY:	MJB
CHECKED BY:	PTG
DRAWN BY:	JPW
DESIGNER:	PTG
G & O JOB NO.:	22260.00
FILE:	S_ELEV-SECT.DWG

0 1" 2"
TWO INCHES AT FULL SCALE.
IF NOT, SCALE ACCORDINGLY

STRUCTURAL

SCHEDULE A
BOOSTER STATION ELEVATIONS AND CROSS SECTION

DRAWING: **S3-2** OF: **3**

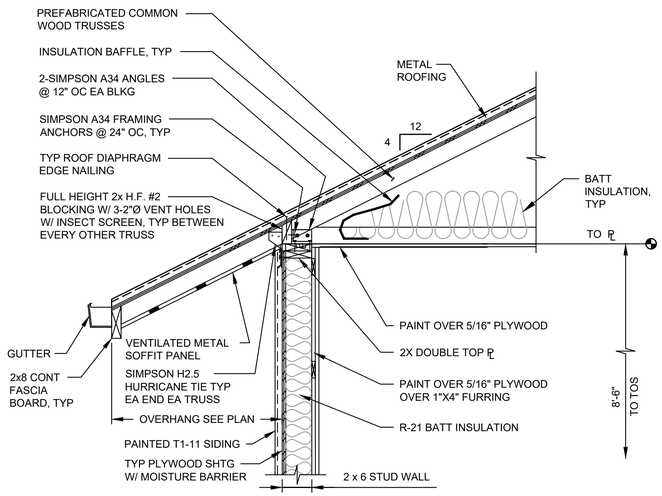

A / S3-1 **SECTION**
SCALE: 3/4"=1'-0"

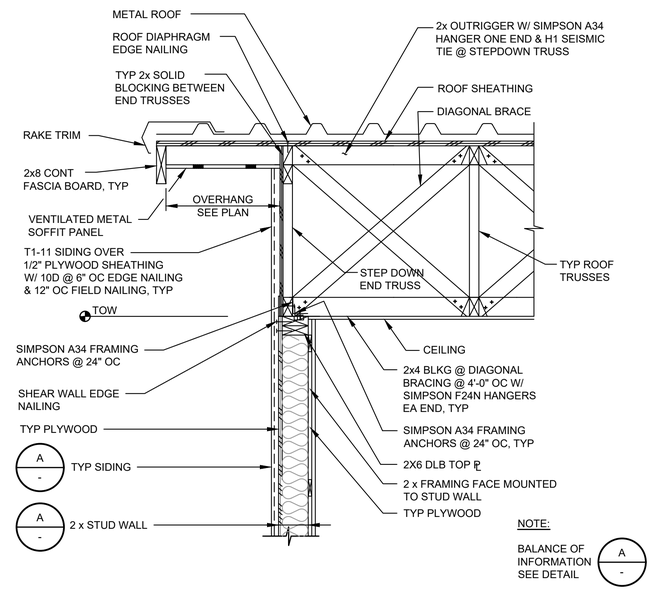

B / S3-1 **SECTION**
SCALE: 3/4"=1'-0"

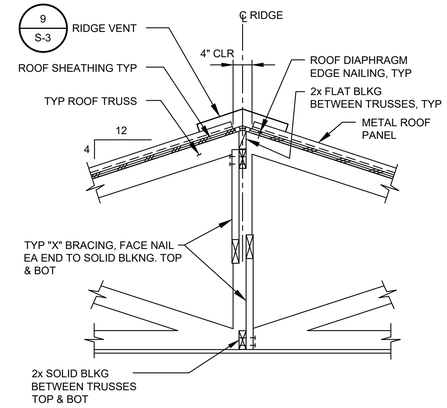

C / S3-1 **SECTION**
SCALE: 3/4"=1'-0"

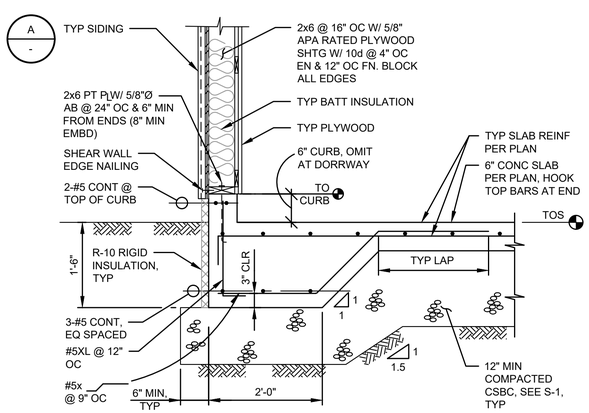

D / S3-1 **SECTION**
SCALE: 3/4"=1'-0"

Gray & Osborne, Inc.
CONSULTING ENGINEERS
2102 CARRIAGE DRIVE SW, BUILDING I
OLYMPIA, WA 98502
(360) 292-7481

MYRON J. BASSEN — STATE OF WASHINGTON — 46334 — STRUCTURAL ENGINEER — PROFESSIONAL ENGINEER
4/1/2025

MASON COUNTY PUD

MASON COUNTY PUD NO. 1
MANZANITA RESERVOIR AND BOOSTER PUMP STATION
1681 E McREAVY RD
UNION, WA

No.	DATE	REVISION

ISSUED FOR:	BID SET
ISSUE DATE:	APRIL 2025
APPROVED BY:	MJB
CHECKED BY:	PTG
DRAWN BY:	JPW
DESIGNER:	PTG
G & O JOB NO.:	22260.00
FILE:	S_SECTIONS.DWG

0 1" 2"
TWO INCHES AT FULL SCALE.
IF NOT, SCALE ACCORDINGLY

STRUCTURAL

SCHEDULE A
STRUCTURAL SECTIONS

DRAWING: **S3-3** OF: **3**

HVAC DESIGN CRITERIA

OA VENTILATION

NONE: BOOSTER PUMP BUILDING IS CONSIDERED A NON-OCCUPIED EQUIPMENT ROOM.

DESIGN TEMPERATURES

WINTER AMBIENT TEMP:	22.1 °F
SUMMER AMBIENT TEMP:	84.9 °F
INTERIOR HEATING SETPOINT:	50 °F
INTERIOR COOLING SETPOINT:	95 °F

HEATING/COOLING

BOOSTER PUMP ROOM:
REQ'D HEATING LOAD: 3.7 MBH
TYPE: ELECTRIC RESISTANCE
REQ'D CAPACITY : 1.1 KW
REQ'D COOLING LOAD: 21.3 MBH
TYPE: VENTILATION
REQ'D AIR FLOW : 3,400 CFM @ 6°F TEMP DELTA

CONTROL DESCRIPTION:

UNIT HEATER [01 HT 01] PROVIDES HEATING TO THE PROCESS ROOM AND IS CONTROLLED BY AN INTERNAL THERMOSTAT.

EXHAUST FAN [01 EF 01] PROVIDES COOLING VENTILATION TO THE PROCESS ROOM AND IS CONTROLLED BY THERMOSTAT [01 T 01].

HVAC GENERAL NOTES

1. MATERIALS, METHODS AND INSTALLATION SHALL COMPLY WITH THE CONTRACT SPECIFICATIONS AND WITH THE PROVISIONS OF THE 2021 INTERNATIONAL MECHANICAL CODE, 2021 INTERNATIONAL BUILDING CODE, 2021 INTERNATIONAL FIRE CODE AS AMENDED BY THE STATE OF WASHINGTON AND THE LOCAL AUTHORITY HAVING JURISDICTION.
2. THESE PLANS ARE SCHEMATIC AND DO NOT SHOW EXACT ROUTING OR EVERY OFFSET, WHICH MAY BE REQUIRED. THE HVAC CONTRACTOR IS TO COORDINATE WITH ALL OTHER TRADES AND IS TO VERIFY ALL CLEARANCES BEFORE COMMENCING WORK.
3. CONTRACTOR SHALL VERIFY THE DIMENSIONS WITH THE EQUIPMENT MANUFACTURER TO PROVIDE DUCT TRANSITIONS TO HVAC VENTILATORS, FANS, LOUVERS, OR SUPPLY/EXHAUST GRILLES TO MATCH THE INLET/OUTLET DIMENSIONS OF THE EQUIPMENT.
4. PROVIDE EARTHQUAKE RESTRAINT FOR HVAC EQUIPMENT IN ACCORDANCE WITH SMACNA RESTRAINT MANUAL AS REQUIRED BY 2021 INTERNATIONAL BUILDING CODE REQUIREMENTS.
5. CONSTRUCTION, SUPPORTS AND INSTALLATION SHALL BE INSTALLED AND COMPLY WITH THE 2021 INTERNATIONAL MECHANICAL CODE (IMC) AND WITH SMACNA HVAC DUCT CONSTRUCTION STANDARDS-METAL AND FLEXIBLE.
6. ALL DUCTWORK IS CLASSIFIED AS LOW PRESSURE.
7. ALL HVAC SYSTEMS SHALL BE BALANCED BY A LICENSED CONTRACTOR IN ACCORDANCE WITH ACCEPTED ENGINEERING STANDARDS AND SPECIFICATION.
8. AN AIR BARRIER TEST SHALL BE PERFORMED IN ACCORDANCE WITH THE WASHINGTON STATE ENERGY CODE AND ASTM E779.
9. LOCATE THERMOSTATS 5 FEET AFF. UNLESS OTHERWISE NOTED.
10. PROVIDE FLEXIBLE DUCT CONNECTIONS ON ALL DUCTWORK CONNECTING TO EQUIPMENT.
11. EQUIPMENT DRAIN PIPING SHALL MAINTAIN A MIN HORIZONTAL SLOPE IN THE DIRECTION OF DISCHARGE OF MIN -1/8 INCH VERTICAL PER 1 FOOT HORIZONTAL.
12. CONTRACTOR SHALL COORDINATE CEILING EQUIPMENT LOCATIONS WITH ARCHITECTURAL REFLECTED CEILING PLANS AND ELECTRICAL LIGHTING LAYOUT.
13. EQUIPMENT CONDENSATE DRAINS SHALL BE TRAPPED AS REQUIRED BY THE EQUIPMENT OR APPLIANCE MANUFACTURER.
14. REFRIGERANT PIPING SHALL BE INSTALLED WITH CLOSED CELL ELASTOMERIC INSULATION IN ACCORDANCE WITH SPECIFICATION 15700. INSULATION EXPOSED TO OUTSIDE CONDITIONS SHALL BE ENCLOSED BY A LINE-HIDE LINESET COVER SYSTEM.
15. BUILDING HVAC DOCUMENTS SUCH AS RECORDS, CALCULATIONS, COMPLIANCE FORMS, AND EQUIPMENT MANUALS SHALL BE SUPPLIED TO THE BUILDING OWNER.

HVAC SYMBOLS

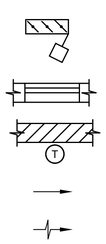

BACK DRAFT DAMPER

LOUVER

THERMOSTAT; WALL MOUNTED
WALL TYPE VARIES; SEE S-SHEETS FOR WALL TYPE

FLOW DIRECTION, EXHAUST LOUVER OR SUPPLY DIFFUSER/GRILLE

FLOW DIRECTION, INTAKE LOUVER OR EXHAUST/RETURN GRILLE

HEATER SCHEDULE

BUILDING	ROOM NAME	UNIT NO.	TYPE	MANUFACTURER & MODEL NO.	KW OUTPUT	CONTROLS	VOLTAGE AND PHASE	MOUTING TYPE	REMARKS
BOOSTER PUMP BUILDING	BOOSTER PUMP ROOM	02 HT 01	UNIT HEATER	QMARK MUH OR EQUAL	3 KW	INTERNAL THEMOSTAT	220 V 1 Ø	WALL BRACKET	PROVIDE INTERNAL THERMOSTAT AND INTERNAL DISCONNECT. MOUNT BOTTOM 7'-6" AFF.

FAN SCHEDULE

BUILDING	ROOM NAME	UNIT NO.	TYPE	MANUFACTURER & MODEL NO.	HP, VOLTAGE, AND PHASE	CONTROLS	CFM AND STATIC PRESSURE	REMARKS
BOOSTER PUMP BUILDING	BOOSTER PUMP ROOM	02 EF 01	ROOFTOP EXHAUST FAN	GREENHECK G-160-VG OR EQUAL	1 HP 115 V 1 Ø	02 T 01	3,400 CFM @ 0.1" WC	PROVIDE THERMAL OVERLOAD, NEMA 4X DISCONNECT, INSULATED ROOF CURB, GRAVITY BACKDRAFT DAMPER, & HI-PRO POLYESTER FINISH.

CONTROL SCHEDULE

BUILDING	ROOM NAME	UNIT NO.	TYPE	CONTROLLED EQUIPMENT	MANUFACTURER & MODEL NO.	HEAT SET POINT	COOL SET POINT	VOLTAGE AND PHASE	REMARKS
BOOSTER PUMP BUILDING	BOOSTER PUMP ROOM	02 T 01	MODULATING THERMOSTAT	02 EF 01	GREENHECK TEMP/HUMID CONTROLLER OR EQUAL	N/A	95 °F	12 VDC	

LOUVER SCHEDULE

BUILDING	ROOM NAME	LOUVER NO.	TYPE	MANUFACTURER & MODEL NO.	ROUGH OPENING SIZE (WxH)	MOUNTING HEIGHT	REMARKS
BOOSTER PUMP BUILDING	BOOSTER PUMP ROOM	LVR2-1	INTAKE LOUVER	GREENHECK ESD-635 OR EQUAL	32" X 36"	BOTTOM 72" AFF	PROVIDE GRAVITY BACKDRAFT DAMPER, EXTENDED SILL, HYLAR/KYNAR FINISH, INSECT SCREEN, AND CLIP ANGLES.

GRILLE/DIFFUSER SCHEDULE

BUILDING	ROOM NAME	GRILLE NO.	TYPE	MANUFACTURER & MODEL NO.	SIZE (WxL)	REMARKS
BOOSTER PUMP BUILDING	BOOSTER PUMP ROOM	E1-1	EXHAUST GRILLE	PRICE 90 OR EQUAL	24" x 24"	PROVIDE SURFACE MOUNTING AND BAKED ENAMEL FINISH.

HVAC EQUIPMENT & AIR DEVICE IDENTIFICATIONS

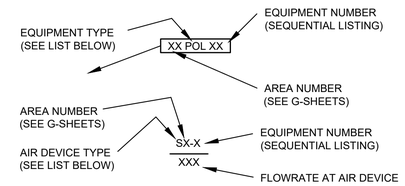

EQUIPMENT

EF	EXHAUST FAN
DH	DEHUMIDIFIER
HT	HEATER
T	THERMOSTAT

AIR DEVICE

LVR	LOUVER

HVAC ABBREVIATIONS

A	AMPERE
ACH	AIR CHANGES PER HOUR
AFF	ABOVE FINISHED FLOOR
AFG	ABOVE FINISHED GRADE
BLDG	BUILDING
BTU	BRITISH THERMAL UNIT
CAP	CAPACITY
CFM	CUBIC FEET PER MINUTE
DIA	DIAMETER
ECM	ELECTRONICALLY COMMUTATED MOTOR
EF	EXHAUST FAN
°F	DEGREES FAHRENHEIT
MBH	1,000 BTU'S/HR
MCA	MINIMUM CIRCUIT AMPS
MFR	MANUFACTURER
MOCP	MAXIMUM OVER CURRENT PROTECTION
NA	NOT APPLICABLE
OA	OUTSIDE AIR
POC	POINT OF CONNECTION
RA	RETURN AIR
SA	SUPPLY AIR
SP	STATIC PRESSURE
TEMP	TEMPERATURE
UNO	UNLESS NOTED OTHERWISE
V	VOLTS
VD	VOLUME DAMPER
W	WATT
WC	WATER COLUMN
WP	WALL PENETRATION

Gray & Osborne, Inc.
CONSULTING ENGINEERS
1130 RAINIER AVENUE SOUTH, SUITE 300
SEATTLE, WASHINGTON 98144
(206) 284-0860

MASON COUNTY PUD NO. 1
MANZANITA RESERVOIR AND BOOSTER PUMP STATION
1681 E McREAVY RD
UNION, WA

No.	DATE	REVISION

ISSUED FOR:	BID SET
ISSUE DATE:	APRIL 2025
APPROVED BY:	AMP
CHECKED BY:	AMP
DRAWN BY:	WRG
DESIGNER:	WRG
G & O JOB NO.:	22260.00
FILE:	H3_BLDG_PLN.DWG

0 1" 2"
TWO INCHES AT FULL SCALE.
IF NOT, SCALE ACCORDINGLY

HVAC

SCHEDULE A
HVAC DESIGN CRITERIA, ABBREV SYMBOLS, EQUIP IDENT & NOTES

DRAWING: H3-1 OF: 2

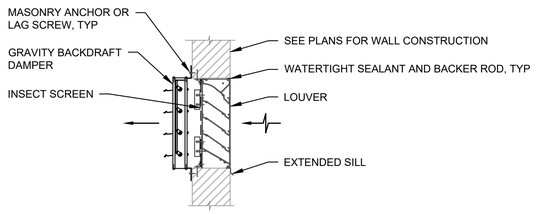

1 / - **LOUVER AND BACKDRAFT DAMPER**
SCALE: 3/4"=1'-0"

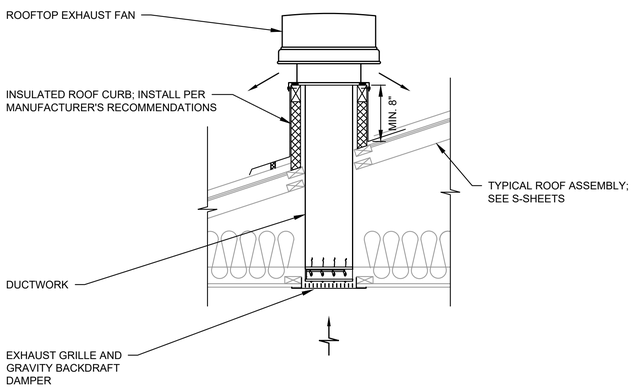

2 / - **ROOFTOP EXHAUST FAN W/ CURB AND BACKDRAFT DAMPER**
SCALE: 3/4"=1'-0"

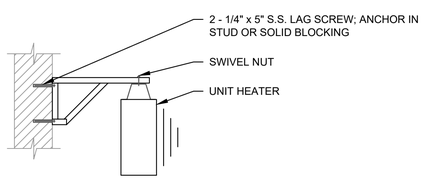

3 / - **HEATER MOUNTING**
SCALE: 3/4"=1'-0"

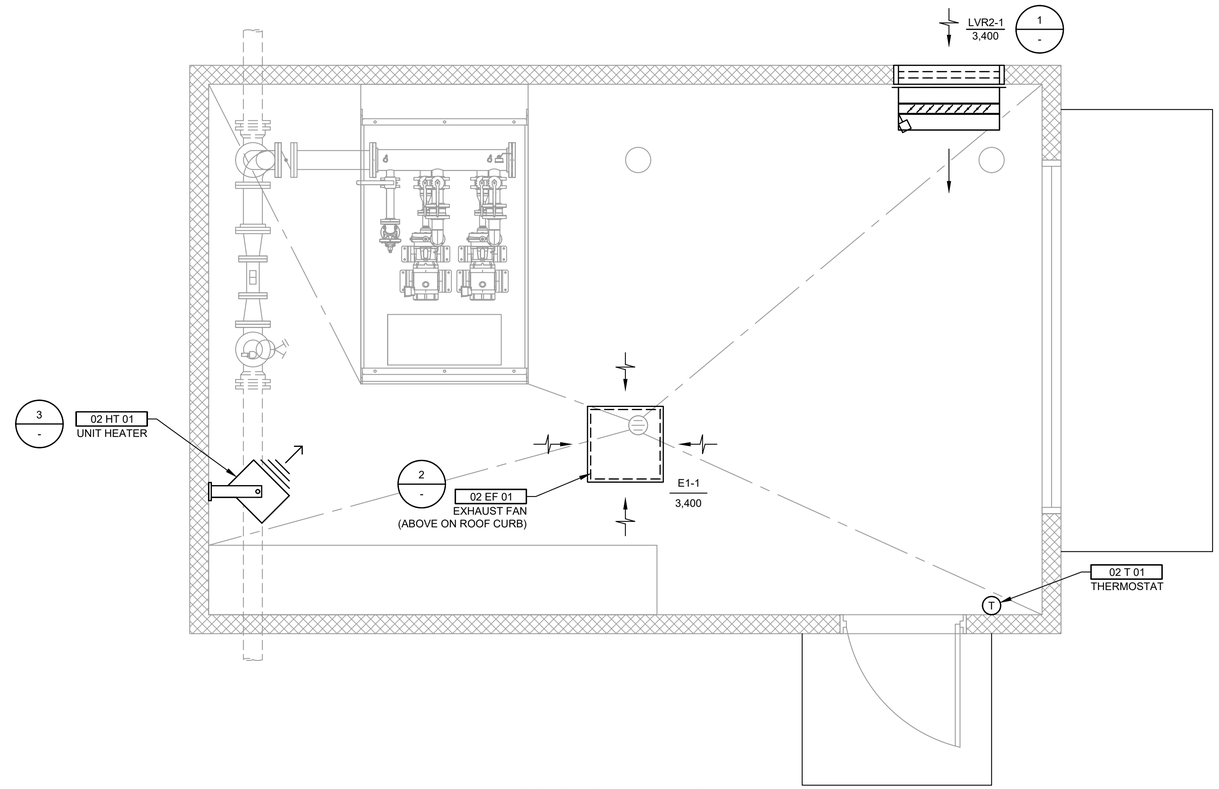

BOOSTER PUMP BUILDING HVAC FLOOR PLAN
SCALE: 1/2"=1'-0"

Gray & Osborne, Inc.
CONSULTING ENGINEERS
1130 RAINIER AVENUE SOUTH, SUITE 300
SEATTLE, WASHINGTON 98144
(206) 284-0860

AARON M. PEASE — STATE OF WASHINGTON — 40276 — REGISTERED PROFESSIONAL ENGINEER — 04/01/2025

MASON COUNTY PUD

MASON COUNTY PUD NO. 1
MANZANITA RESERVOIR AND BOOSTER PUMP STATION
1681 E McREAVY RD
UNION, WA

No.	DATE	REVISION

ISSUED FOR:	BID SET
ISSUE DATE:	APRIL 2025
APPROVED BY:	AMP
CHECKED BY:	AMP
DRAWN BY:	WRG
DESIGNER:	WRG
G & O JOB NO.:	22260.00
FILE:	H3_BLDG_PLN.DWG

0 1" 2"
TWO INCHES AT FULL SCALE.
IF NOT, SCALE ACCORDINGLY

HVAC

SCHEDULE A
HVAC FLOOR PLAN

DRAWING: **H3-2** OF: **2**

ABBREVIATIONS

A	AMPERE (AMP)
AC	ALTERNATING CURRENT
AF	BREAKER FRAME SIZE (IN AMPS)
AI	ANALOG INPUT
AIC	AMPERES-INTERRUPTING CAPACITY
AL	ALUMINUM
AM	AMMETER
AO	ANALOG OUTPUT
AT	BREAKER TRIP (SETTING IN AMPS)
ATS	AUTOMATIC TRANSFER SWITCH
AWG	AMERICAN WIRE GAUGE
BATT	BATTERY
BKR	BREAKER
CP	CONTROL PANEL
CPT	CONTROL POWER TRANSFORMER
CST	CONTROL STATION
CT	CURRENT TRANSFORMER
CU	COPPER
DC	DIRECT CURRENT
DI	DISCRETE INPUT
DIST	DISTRIBUTION
DO	DISCRETE OUTPUT
DTWV	DISCHARGE-TO-WASTE VALVE
EIOM	EXTENDED I/O MODULE
ETC	ELAPSED TIME/COUNTER METER
ETM	ELAPSED TIME METER
ENCL	ENCLOSURE
EXIST	EXISTING
FDR	FEEDER
FLA	FULL LOAD AMPS
FU	FUSE
FVNR	FULL VOLTAGE NON REVERSING
FVR	FULL VOLTAGE REVERSING
FY	FLOW COMPUTATION
G	GROUND CONDUCTOR
GEC	GROUNDING ELECTRODE CONDUCTOR
GFCI	GROUND FAULT CIRCUIT INTERRUPTER
GND	GROUND
H	HORN
HA	HAND-AUTO
HIM	HUMAN INTERFACE MODULE
HMI	HUMAN MACHINE INTERFACE
HOA	HAND-OFF-AUTO
HOR	HAND-OFF-REMOTE
HP	HORSEPOWER
JCXXX	JUNCTION BOX, CONTROL
JPXXX	JUNCTION BOX, POWER
JSXXX	JUNCTION BOX, SIGNAL
kA	KILOAMPERES
kAIC	KILOAMPERES-INTERRUPTING CAPACITY
KCM	THOUSAND CIRCULAR MILLS
kV	KILOVOLT
kVA	KILOVOLT-AMPERE
kVAh	KILOVOLT-AMPERE HOUR
kVAR	KILOVAR (REACTIVE KILOVOLT-AMPERE)
KVARh	KILOVAR-HOUR
kW	KILOWATT
kWh	KILOWATT-HOUR
LA	LIGHTNING ARRESTOR
LAN	LOCAL AREA NETWORK
LFMC	LIQUIDTIGHT FLEXIBLE METAL CONDUIT
LINE	POWER LINE/POWER BLOCK
LV	LOW VOLTAGE
M	MAGNETIC CONTACTOR
mA	MILLIAMPERES
MCC	MOTOR CONTROL CENTER
MCM	THOUSAND CIRCULAR MILLS
MCP	MOTOR CIRCUIT PROTECTOR
MOV	METAL OXIDE VARISTOR
MS	MOTOR STARTER
MSDS	MOTOR SAFETY DISCONNECT SWITCH
MTS	MANUAL TRANSFER SWITCH
MTU	MASTER TELEMETRY UNIT
mV	MILLIVOLT
MW	MEGAWATT
N	NEUTRAL CONDUCTOR
NEC	NATIONAL ELECTRICAL CODE
NEMA	NATIONAL ELECTRIC MANUFACTURERS ASSOC.
NESC	NATIONAL ELECTRICAL SAFETY CODE
NFPA	NATIONAL FIRE PROTECTION AGENCY
OCPD	OVERCURRENT PROTECTION DEVICE
OE	OVERHEAD ELECTRIC
OIU	OPERATOR INTERFACE UNIT
OL	OVERLOAD, THERMAL
OLR	OVERLOAD RELAY
P	POLE
PF	POWER FACTOR
PH	PHASE
PLC	PROGRAMMABLE LOGIC CONTROL
PMR	PHASE MONITOR RELAY
PMU	POWER MONITOR UNIT
POT	POTENTIOMETER
PT	POTENTIAL TRANSFORMER
PVC	POLYVINYL CHLORIDE CONDUIT
PVC-RGS	PVC COATED RGS
RGS	RIGID GALVANIZED STEEL CONDUIT
RVSS	REDUCED-VOLTAGE SOFT START
RTU	REMOTE TELEMETRY UNIT
s	SECOND
SHD	SHIELDED
SPD	SURGE PROTECTION DEVICE
SS	STAINLESS STEEL
SUSE	SUITABLE FOR USE AS A SERVICE ENTRANCE
TB	TERMINAL BLOCK
TDAD	TIME DELAY AFTER DE-ENERGIZATION
TDAE	TIME DELAY AFTER ENERGIZATION
TQS	TORQUE SWITCH
TP	TWISTED PAIR
TSP	TWISTED SHIELDED PAIR
TST	TWISTED SHIELDED TRIAD
TT	TWISTED TRIAD
T/M	THERMAL MAGNETIC
UPS	UNINTERRUPTIBLE POWER SUPPLY
V	VOLT
VA	VOLT-AMPERE
VFD	VARIABLE FREQUENCY DRIVE
VMR	VOLTAGE MONITORING RELAY
W	WATT
WAN	WIDE AREA NETWORK
Wh	WATT-HOUR
WP	WEATHER PROOF
XFMR	POWER TRANSFORMER

SYMBOL LEGEND

PLAN SYMBOLS

- CONDUIT DOWN
- CONDUIT UP
- CONDUIT STUB UP/END CAP
- DISCONNECT SWITCH
- FUSED DISCONNECT SWITCH
- COMMUNICATION OUTLET
- TELEPHONE OUTLET
- SPECIAL OUTLET
- SIMPLEX RECEPTACLE
- DUPLEX RECEPTACLE
- DUPLEX RECEPTACLE (HIDDEN)
- QUAD RECEPTACLE
- QUAD RECEPTACLE (HIDDEN)
- FLOOR MOUNTED RECEPTACLE
- OR — SINGLE / DUAL — LED LIGHT POLES
- #12 AWG GROUND CONDUCTOR
- #12 AWG NEUTRAL CONDUCTOR
- #12 AWG BRANCH CONDUCTOR
- CROSSMARKS INDICATE QUANTITY AND USE OF CONDUCTORS
- Sx LIGHT SWITCH, X = 3 = 3-WAY K = KEY 4 = 4-WAY M = MOTION
- SEAL OFF
- X MOTOR X = HORSE POWER
- XX XX= CV CHECK VALVE; FE FLOW ELEMENT; FI FLOW INDICATOR; FIT FLOW INDICATOR/TRANSMITTER; FS FLOW SWITCH; FT FLOW TRANSMITTER; HD HEAT DETECTOR; IS INTRUSION SWITCH; J JUNCTION BOX; L LIMIT SWITCH; LE LEVEL ELEMENT; LI LEVEL INDICATOR; LIT LEVEL INDICATOR/TRANSMITTER; LS LEVEL SWITCH/FLOAT; LT LEVEL TRANSDUCER; MDT MOTION DETECTOR; MFM MAGNETIC FLOW METER; MOV MOTOR OPERATED VALVE; PC PHOTO CELL; PE PRESSURE ELEMENT; PI PRESSURE INDICATOR; PIT PRESSURE INDICATOR TRANSMITTER; PS PRESSURE SWITCH; PT PRESSURE TRANSMITTER; SD SMOKE DETECTOR; SV SOLENOID VALVE; T THERMOSTAT

ELEMENTARY WIRING DIAGRAM SYMBOLS

- CONNECTION POINT
- TERMINAL POINT
- SCREW TERMINAL
- MOUNTED ON OUTER DOOR
- MOUNTED ON INNER DOOR
- LOCKABLE DEVICE
- NC CONTACT
- NC CONTACTOR
- NO CONTACT
- NO CONTACTOR
- SS SOLID STATE CONTACTOR
- ALT ALTERNATING RELAY
- CR CONTROL RELAY
- C CONTACTOR
- C BP "BYPASS" CONTACTOR
- C IC "ISOLATION" CONTACTOR
- C SS SOLID STATE CONTACT RELAY
- M MOTOR RELAY
- TR TIME DELAY RELAY (TDAE)
- TR TIME DELAY RELAY (TDAD)
- LIGHT EMITTING DIODE OR DIODE
- X LIGHT FIXTURE; X = REFERENCE LIGHTING SCHEDULE IF APPLICABLE
- L A "PUSH TO TEST" LED PILOT LIGHT; A = AMBER, B = BLUE, G = GREEN, R = RED, W = WHITE
- OFF ON XO / OX OR OFF ON OX — SELECTOR SWITCHES
- OFF HAND AUTO XOO / OXO / OOX OR OFF HAND AUTO XOO / OOX — HAND-OFF-AUTO SWITCHES
- OFF ON RESET XOO / OOX — ON-OFF-RESET SWITCH
- GFCI DUPLEX OUTLET
- DUPLEX OUTLET
- FUSE
- FUSED SWITCH W/ LED
- N.O. TOGGLE SPST SWITCH
- N.C. TOGGLE SPST SWITCH
- N.O. TEMPERATURE SWITCH
- N.C. TEMPERATURE SWITCH
- N.O. PRESSURE SWITCH
- N.C. PRESSURE SWITCH
- N.O. LIMIT SWITCH
- N.C. LIMIT SWITCH
- N.O. FLOW SWITCH
- N.C. FLOW SWITCH
- N.O. FLOAT SWITCH
- N.C. FLOAT SWITCH
- N.O. DIFFERENTIAL PRESSURE SWITCH
- N.C. DIFFERENTIAL PRESSURE SWITCH
- N.O. PUSHBUTTON
- N.C. PUSHBUTTON
- N.O. MUSHROOM PUSHBUTTON
- N.C. MUSHROOM PUSHBUTTON
- TDAE, N.O., TIME DELAY CLOSE, INSTANTANEOUS RE-OPEN
- TDAE, N.C., TIME DELAY OPEN, INSTANTANEOUS RE-CLOSE
- TDAD, N.O., INSTANTANEOUS CLOSE, TIME DELAY RE-OPEN
- TDAD, N.C., INSTANTANEOUS OPEN, TIME DELAY RE-CLOSE
- GROUND EQUIPMENT/CHASSIS
- GROUND, ISOLATED
- RESISTOR
- POTENTIOMETER
- SOLENOID VALVE COIL
- METAL OXIDE VARISTOR (MOV)
- TRANSFORMER WINDING/ REACTOR/CHOKE

ONE LINE SYMBOLS

- CAPACITOR
- REACTOR/CHOKE
- M CIRCUIT BREAKER, MAGNETIC ONLY
- T/M CIRCUIT BREAKER, THERMAL-MAGNETIC
- CONNECTION POINT
- CONTACTOR
- CURRENT TRANSFORMER
- FUSE
- FUSIBLE DISCONNECT
- AM ANALOG AMMETER
- THERMAL OVERLOAD RELAY
- GROUND EQUIPMENT/CHASSIS
- S/N SOLID NEUTRAL
- TRANSFORMER

GENERAL SYMBOLS

- XXXXX CONDUIT
- XX XXXX XX TAG LABEL
- GFCI GFCI PANELBOARD CIRCUIT
- X AREA ID TAG
- DEMOLITION (DEMO)
- INTRINSICALLY SAFE AREA
- CLEARANCE AREA

LINETYPES

- EXPOSED CONDUIT
- UNDERGROUND (BURIED) CONDUIT
- GROUNDING ELECTRODE CONDUCTORS
- EMBEDDED CONDUIT (WALLS, CONCRETE, ETC.)

NOTE: UNLESS NOTED OTHERWISE.

NOTE:
THIS IS A GENERAL LEDGER SHEET. ALL SYMBOLS MAY NOT APPLY.

GENERAL ELECTRICAL NOTES:

SITE AND BUILDING PLANS:

1. CONDUIT ROUTING IS SHOWN FOR CLARITY. ACTUAL ROUTING MAY BE MORE DIRECT AND IS LEFT TO THE CONTRACTOR FOLLOWING SPECIFICATIONS 16130. NON-ELECTRICAL BURIED PIPING HAS ROUTING PRIORITY OVER ELECTRICAL BURIALS.
2. ALL TRENCHING SHALL BE PER ELECTRICAL TRENCHING DETAIL, REFERENCE ED-SHEETS.
3. THE CONTRACTOR SHALL TAKE ALL STEPS NECESSARY TO PROTECT EXISTING UTILITIES.
4. THROUGHOUT THIS DOCUMENT, THE TERMS "DEMO" AND "DEMOLISH" MEAN TO REMOVE, THEN WASTEHAUL OR RETURN TO THE OWNER, PER THE OWNER'S DIRECTION.
5. THROUGHOUT THIS DOCUMENT, THE TERMS "PROVIDE" AND "INSTALL" MEAN TO PROVIDE AND INSTALL.

GENERAL CONTROL PANEL NOTES:

1. UNLESS SPECIFICALLY NOTED OTHERWISE ON THE CONTROL PANEL DETAILS, THE FOLLOWING NOTES APPLY.
   - 1.1 ALL ENCLOSURES SHALL BE PROVIDED WITH AN ENGRAVED NAMEPLATE CORRESPONDING TO THE ASSOCIATED TAG ID NUMBER AND TAG DESCRIPTION.

     TAG DESCRIPTION ← 1/4" TEXT
     [TAG NUMBER] ← 3/16" TEXT

     NOTE: MOTOR STARTER NAMEPLATES SHALL BE BLACK WITH WHITE LETTERING, REFERENCE MCC PANEL DOOR NAMEPLATE SCHEDULE.
   - 1.2 WHERE PANELS CONTAIN POWER FROM MULTIPLE SOURCES, PROVIDE A YELLOW SAFETY STICKER, APPROXIMATELY 2" x 3", AS SHOWN BELOW.

     CAUTION
     THIS DEVICE IS POWERED FROM SEVERAL SOURCES
     THE DISCONNECT SWITCH WILL NOT SHUT OFF ALL SOURCES OF ELECTRICAL ENERGY

INDOOR INSTALLATIONS:

1. ALL EXPOSED PORTIONS OF CONDUITS FROM UNDERGROUND SHALL BE RGS. ALL OVERHEAD CONDUITS SHALL BE EMT.
2. EXCEPT FOR INSTRUMENTATION, NON LINEAR CIRCUITS, AND INTRINSICALLY SAFE CIRCUITS ALL PORTIONS OF CONDUITS IN THE ATTIC SHALL BE EMT.
3. PANELS MOUNTED ON INTERIOR WALLS SHALL BE SUPPORTED TO THE WALL WITH 1/2-INCH (MINIMUM) GALVANIZED UNISTRUT.

PULLBOX/VAULT/OUTDOOR INSTALLATIONS:

1. ALL MOUNTING FASTENERS (NUTS, BOLTS SCREWS, WASHERS, ETC.) SHALL BE 316 STAINLESS STEEL.
2. ALL MOUNTING BRACKETS AND BRACING SHALL BE 316L STAINLESS STEEL.
3. ALL EXPOSED PORTIONS OF CONDUITS SHALL BE PVC-COATED RGS UNLESS SPECIFICALLY NOTED OTHERWISE.
4. CONSTRUCTION PRIORITY SHALL BE TO ENTER THE BOTTOM OF ENCLOSURES. ALL CONNECTION INTO ENCLOSURES SHALL BE WATERTIGHT. WHERE SIDE OR TOP ENTRY IS USED CONNECTIONS SHALL BE MADE USING MYERS-TYPE HUBS. REFERENCE SPECIFICATION 16130.
5. PANELS MOUNTED ON VERTICAL WALLS SHALL BE SUPPORTED TO THE WALL WITH 1/2-INCH (MINIMUM) 316L STAINLESS STEEL UNISTRUT.
6. ENCLOSURE SHALL INCLUDE WELDED MOUNTING TABS. HOLES SHALL NOT BE DRILLED THROUGH ENCLOSURE SURFACES FOR MOUNTING PURPOSE.

CABLE AND CONDUIT NOTES:

1. REFERENCE SPECIFICATION 16120 FOR CONDUCTORS, INSTRUMENTATION, COMMUNICATION, AND OTHER SPECIAL CABLES AND CONDUCTORS.
2. REFERENCE SPECIFICATION 16130 FOR RACEWAYS, BOXES, AND JUNCTION BOX TYPES, AND HANDHOLE, PULLBOX, AND VAULT CONDUIT INSTALLATION METHODS.
3. CONDUIT NUMBERS ARE FORMATTED AS:

   TAANN(S) WHERE: T = TYPE (P=POWER; C=CONTROL; S=SIGNAL/INSTRUMENTATION)
   AA= AREA NUMBER (01-99)
   NN= CONDUIT NUMBER WITHIN THE AREA (01-99)
   S = SPARE CONDUIT (~ "TILDE") (IF APPLICABLE)

   P0319~ = AREA 03 POWER CONDUIT NO. 19, SPARE
   C0112 = AREA 01 CONTROL CONDUIT NO. 12
   S0521~ = AREA 05 INSTRUMENTATION CONDUIT NO. 21, SPARE
4. CABLE AND CONDUIT SCHEDULES:
   - 4.1. THE CABLE AND CONDUIT SCHEDULE PROVIDES CONDUIT NUMBER, SOURCE, DESTINATION, AND SIZE AS WELL AS CONDUCTOR AND CABLE REQUIREMENTS. REFERENCE SPECIFICATION 16130 FOR CONDUIT COMPOSITION AND COATING.
   - 4.2. CONDUITS MARKED WITH "* n" (WHERE n = 1, 2, OR 3) SHALL BE 100% CONTINUOUS PER SPECIFICATION 16130.

     SPECIFICALLY, CONDUITS MARKED WITH:
     - "* 1" DENOTE NON LINEAR POWER CIRCUITS. IF THESE CONDUITS ENTER A PULLBOX, THEN THEY MUST CONNECT TO A "TYPE 1" J-BOX INSIDE THE PULLBOX.
     - "* 2" NOT USED.
     - "* 3" DENOTE INSTRUMENTATION CIRCUITS THAT ARE NOT INTRINSICALLY SAFE. IF THESE CONDUITS ENTER A PULLBOX, THEN THEY MUST CONNECT TO A "TYPE 3" J-BOX INSIDE THE PULLBOX.
5. REGARDLESS OF THE TYPE OF CONDUIT BEING ROUTED TO A MOTOR, THE LAST 18 INCHES OF THE CONDUIT CONNECTING TO THE MOTOR SHALL BE LFMC.

READING ELECTRICAL SHEETS:

ELEMENTARY DIAGRAMS:

1. ELEMENTARY DIAGRAMS ARE SHOWN IN LADDER LOGIC FORM WITH LINE NUMBERS FORMATTED AS:

   SS.LL WHERE SS = SHEET NUMBER AND LL = LINE NUMBER
2. RELAY COIL "TYPES" ARE INDICATED INSIDE THE COIL SYMBOL AS PER THE SYMBOL SCHEDULE ON THIS SHEET. THE COIL NUMBER IS OF THE FORMAT:

   TTSS.LL.AA WHERE TT = RELAY TYPE (PER SYMBOL SCHEDULE)
   SS.LL = AS DESCRIBED ABOVE
   AA = ASSOCIATION WITH A DRIVE, CONTROLLER, CONTROL PANEL, ETC.
3. RELAY CONTACTS ARE NUMBERED IN ASSOCIATION WITH THEIR COILS FOLLOWED BY "-X" WHERE X IS THE CONTACT POLE NUMBER.

   EXAMPLE: RELAY CONTACTS FOR A DPDT RELAY

POLE NUMBER	N.O. CONTACT REFERENCE	N.C. CONTACT REFERENCE
1:	12.40	NA\
2:	13.04	13.05\

   LINE NUMBER
   SHEET NUMBER

   N.O. = NORMALLY OPEN CONTACT
   N.C. = NORMALLY CLOSED CONTACT.
4. CONTACTS AND ANALOG SIGNALS CONNECTED TO PLC I/O ARE FORMATTED AS:

   *RR:SS:CC WHERE * DENOTES A PLC I/O CONNECTION
   RR = PLC RACK NUMBER
   SS = RACK SLOT NUMBER
   CC = SLOT CHANNEL NUMBER

   *TT:CC WHERE * DENOTES A PLC I/O CONNECTION
   TT = I/O TYPE:
   AI = ANALOG INPUT
   AO = ANALOG OUTPUT
   DI = DIGITAL INPUT
   DO = DIGITAL OUTPUT
   CC = EMBEDDED CHANNEL NUMBER

PANELBOARD CIRCUIT ASSIGNMENTS:

1. LIGHTING FIXTURES AND RECEPTACLES ARE SHOWN WITH THEIR PANELBOARD CIRCUIT BREAKER NUMBER FOLLOWING THE FORMAT BELOW:

   PANELBOARD TAG (EX: [01 PB 02]
   CKT 02-02, 04, 06
   3RD CIRCUIT BREAKER POSITION NUMBER (3 POLE)
   2ND CIRCUIT BREAKER POSITION NUMBER (2 POLE)
   1st CIRCUIT BREAKER POSITION NUMBER

PLCS:

1. REFERENCE CONTROL PANEL SPECIFICATION 16940.
2. WIRE ALL PLC ANALOG AND DIGITAL INPUTS AND OUTPUTS, WHETHER ASSIGNED OR SPARE, TO TERMINAL GROUPS PER SPECIFICATION.
3. ALL PLC DIGITAL OUTPUTS SHALL BE BUFFERED THROUGH INTERPOSING RELAYS. SPARE OUTPUTS, AND OUTPUTS ASSIGNED OUTSIDE THE PANEL, SHALL BE CONNECTED TO A FUSED TERMINAL PAIR.
4. N.O. OR N.C. CONTACTS FORMATTED AS *RR:SS:CC ARE DERIVED FROM PLC DIGITAL OUTPUT BUFFER RELAYS. THE RELAY CONTACT INDICATOR *RR:SS:CC INDICATES THE RELAY'S ASSOCIATED PLC DIGITAL OUTPUT RACK, SLOT, AND CHANNEL.

Gray & Osborne, Inc.
CONSULTING ENGINEERS
2102 CARRIAGE DRIVE SW, BUILDING I
OLYMPIA, WA 98502
(360) 292-7481

DAVID ALAN CALKINS — STATE OF WASHINGTON — 43249 — REGISTERED PROFESSIONAL ENGINEER — 4/4/2025

MASON COUNTY PUD

MASON COUNTY PUD NO. 1
MANZANITA RESERVOIR AND BOOSTER PUMP STATION
1681 E McREAVY RD
UNION, WA

No.	DATE	REVISION

ISSUED FOR:	BID SET
ISSUE DATE:	APRIL 2025
APPROVED BY:	DAC
CHECKED BY:	JRN
DRAWN BY:	DCK
DESIGNER:	DAC
G & O JOB NO.:	22260.00
FILE:	E_SYM_ABBR.DWG

ELECTRICAL

SCHEDULE A ELECTRICAL SYMBOLS, ABBREVIATIONS, AND GENERAL NOTES

DRAWING: **E-1** OF: **12**

AREA 01 DEVICE TAG LIST

TAG NO.	DESCRIPTION	VINTAGE
01 CPX 01	CONTROL PANEL, ALDERBROOK WELL BUILDING	EXISTING
01 HH 01	HANDHOLE	NEW
01 MTR 01	MOTOR, HIGHLAND PARK WELL	EXISTING
01 PBX 01	PANELBOARD, ALDERBROOK WELL BUILDING	EXISTING

AREA 02 DEVICE TAG LIST

TAG NO.	DESCRIPTION	VINTAGE
02 IS 01	INTRUSION SWITCH, ROOF HATCH, RESERVOIR 1	NEW
02 IS 02	INTRUSION SWITCH, LADDER GUARD, RESERVOIR 1	NEW
02 IS 03	INTRUSION SWITCH, ROOF HATCH, RESERVOIR 2	NEW
02 IS 04	INTRUSION SWITCH, LADDER GUARD, RESERVOIR 2	NEW
02 LS 01	LEVEL SWTICH, HIGH LEVEL, RESERVOIR 1	NEW
02 LS 02	LEVEL SWITCH, OFF, RESERVOIR 1	NEW
02 LS 03	LEVEL SITCH, ON, RESERVOIR 1	NEW
02 LS 04	LEVEL SWITCH, LOW LEVEL ALARM, RESERVOIR 1	NEW
02 LS 05	LEVEL SWTICH, HIGH LEVEL, RESERVOIR 2	NEW
02 LS 06	LEVEL SWITCH, OFF, RESERVOIR 2	NEW
02 LS 07	LEVEL SITCH, ON, RESERVOIR 2	NEW
02 LS 08	LEVEL SWITCH, LOW LEVEL ALARM, RESERVOIR 2	NEW
02 LT 01	LEVEL TRANSDUCER, RESERVOIR 1	NEW
02 LT 02	LEVEL TRANSDUCER, RESERVOIR 2	NEW

AREA 03 DEVICE TAG LIST

TAG NO.	DESCRIPTION	VINTAGE
03 AD 01	AUTODIALER	NEW
03 ATS 01	AUTOMATIC TRANSFER SWITCH (SUSE)	NEW
03 BLDG 01	BOOSTER PUMP BUILDING	NEW
03 BP 01	BOOSTER PUMP NO. 1 (HIGHLAND PARK)	NEW
03 BP 02	BOOSTER PUMP NO. 2 (HIGHLAND PARK)	NEW
03 BP 03	BOOSTER PUMP, SKID-MOUNTED BOOSTER PUMP STATION (ALDERBROOK)	FUTURE
03 BP 04	BOOSTER PUMP, SKID-MOUNTED BOOSTER PUMP STATION (ALDERBROOK)	FUTURE
03 CP 01	CONTROL PANEL, PLC, SKID-MOUNTED BOOSTER PUMP STATION (HIGHLAND PARK)	NEW
03 CP 02	CONTROL PANEL, PLC, BOOSTER PUMP BUILDING	NEW
03 EF 01	EXHAUST FAN, BOOSTER PUMP BUILDING	NEW
03 FE 01	FLOW ELEMENT - HIGHLAND PARK	NEW
03 FE 02	FLOW ELEMENT - ALDERBROOK	NEW
03 FIT 01	FLOW INDICATOR/TRANSMITTER - HIGHLAND PARK	NEW
03 FIT 02	FLOW INDICATOR/TRANSMITTER - ALDERBROOK	NEW
03 GADP 01	GENERATOR AUXILIARY DEVICE PANEL	NEW
03 GCB 01	GENERATOR CIRCUIT BREAKER	NEW
03 GCB 02	GENERATOR CIRCUIT BREAKER	NEW
03 GCP 01	GENERATOR CONTROL PANEL	NEW
03 GEN 01	GENERATOR	NEW
03 HP 01	HEAT PUMP, BOOSTER PUMP BUILDING	NEW
03 HT 01	HEATER, BOOSTER PUMP BUILDING	NEW
03 MB 01	METER BASE	NEW
03 MD 01	MOTORIZED DAMPER NO. 1	NEW
03 MD 02	MOTORIZED DAMPER NO. 2	NEW
03 MFM 01	MAGNETIC FLOW METER (HIGHLAND PARK)	NEW
03 MS 01	MOTOR STARTER	NEW
03 MS 02	MOTOR STARTER	NEW
03 MS 03	MOTOR STARTER	NEW
03 MS 04	MOTOR STARTER	NEW
03 PB 01	PANELBOARD	NEW
03 PB 02	PANELBOARD	NEW
03 PT 01	PRESSURE TRANSDUCER, SUCTION (HIGHLAND PARK), SKID-MOUNTED BOOSTER PUMP STATION (HIGHLAND PARK)	NEW
03 PT 02	PRESSURE TRANSDUCER, DISCHARGE (HIGHLAND PARK), SKID-MOUNTED BOOSTER PUMP STATION (HIGHLAND PARK)	NEW
03 PT 03	PRESSURE TRANSDUCER, SUCTION (ALDERBROOK), SKID-MOUNTED BOOSTER PUMP STATION (ALDERBROOK)	FUTURE
03 PT 04	PRESSURE TRANSDUCER, DISCHARGE (ALDERBROOK), SKID-MOUNTED BOOSTER PUMP STATION (ALDERBROOK)	FUTURE
03 SD 01	SMOKE DETECTOR, BOOSTER PUMP BUILDING	NEW
03 SDCB 01	SYSTEM DISCONNECT CIRCUIT BREAKER, AUTOMATIC TRANSFER SWITCH (SUSE)	NEW
03 SMBS 01	SKID-MOUNTED BOOSTER PUMP STATION (HIGHLAND PARK)	NEW
03 SMBS 02	SKID-MOUNTED BOOSTER PUMP STATION (ALDERBROOK)	FUTURE
03 SPD 01	SURGE PROTECTIVE DEVICE	NEW
03 SPD 02	SURGE PROTECTIVE DEVICE	NEW
03 SPD 03	SURGE PROTECTIVE DEVICE	NEW
03 SUB 01	ELECTRICAL SUBSTATION	EXISTING
03 T 01	THERMOSTAT, BOOSTER PUMP BUILDING	NEW
03 UT 01	UTILITY TRANSFORMER	NEW
03 XFMR 01	TRANSFORMER	NEW

NOTES:

1. [03 AD 01]]AUTODAILER SHALL BE 120VAC. MODULAR DESIGN TO ACCEPT ADDITIONAL INPUT CARDS. PROVIDED WITH A MINIMUM OF 16 DISCRETE INPUTS INITIALLY. UNIT SHALL BE CAPABLE OF ACCEPTING ANALOG INPUT CARDS AND DISCRETE OUTPUT CARDS BUT NEITHER ARE REQUIRED AT THIS TIME. COORDINATE WITH OWNER TO PROVIDE MODEL COMPATIBLE WITH OWNER'S PREFERRED CELLULAR PROVIDER. PROVIDING SERVICE (SIM CARD) SHALL BE THE RESPONSIBILITY OF THE OWNER BUT PROGRAMMING OF ALARMS SHALL BE THE RESPONSIBILITY OF THE CONTRACTOR. RACO VERBATIM WITH CELLULARM OPTION OR EQUAL.

ELECTRICAL WORK SUMMARY:

THIS SUMMARY OF ELECTRICAL WORK IS INCLUDED AS A COURTESY AND IS INTENDED TO PROVIDE A GENERAL UNDERSTANDING OF ELECTRICAL DESIGN INTENT AND MAJOR ELECTRICAL CONSTRUCTION TASKS. IT IS NOT PROVIDED AS A COMPLETE LIST OF WORK AND SHALL NOT BE USED FOR BIDDING PURPOSES. REFER TO ALL PLANS AND SPECIFICATIONS.

1. INSTALL NEW 480/277V 3-PHASE ELECTRICAL SERVICE. COORDINATE WITH MASON COUNTY PUD #3.
2. INSTALL NEW 480/277V 3-PHASE ELECTRICAL STANDBY GENERATOR CAPABLE OF POWERING NEW BOOSTER BUILDING LOAD FOR 24-HOURS.
3. INSTALL CONTROL CONNECTION BETWEEN EXISTING ALDERBROOK WELL PUMP AND NEW BOOSTER BUILDING PLC AT MANZANITA RESERVOIR.
4. INSTALL 480V 3-PHASE ELECTRICAL POWER DISTRIBUTION FOR NEW HIGHLAND PARK SKID-MOUNTED BOOSTER STATION. PROVIDE FOR FUTURE ADDITION OF ALDERBROOK SKID-MOUNTED BOOSTER STATION.
5. INSTALL 240/120V 1-PHASE ELECTRICAL DISTRIBUTION FOR RECEPTACLES, LIGHTING, PUMP CONTROL, HVAC, ETC.
6. INSTALL CONTROL WIRING FOR TWO NEW RESERVOIRS AND ROUTE TO NEW BOOSTER BUILDING PLC.
7. EXISTING HIGHLAND PARK BOOSTER STATION WILL HAVE SOME ELECTRICAL DEMOLITION AS EXISTING BOOSTER IS REMOVED.

SHEET LIST

Gray & Osborne, Inc.
CONSULTING ENGINEERS
2102 CARRIAGE DRIVE SW, BUILDING I
OLYMPIA, WA 98502
(360) 292-7481

DAVID ALAN CALKINS
STATE OF WASHINGTON
43249
REGISTERED PROFESSIONAL ENGINEER
4/4/2025

MASON COUNTY PUD

MASON COUNTY PUD NO. 1
MANZANITA RESERVOIR AND BOOSTER PUMP STATION
1681 E McREAVY RD
UNION, WA

No.	DATE	REVISION

ISSUED FOR:	BID SET
ISSUE DATE:	APRIL 2025
APPROVED BY:	DAC
CHECKED BY:	JRN
DRAWN BY:	DCK
DESIGNER:	DAC
G & O JOB NO.:	22260.00
FILE:	E_SYM_ABBR.DWG

ELECTRICAL

SCHEDULE A
DEVICE TAG LIST AND WORK SUMMARY

DRAWING: **E-2** OF: **12**

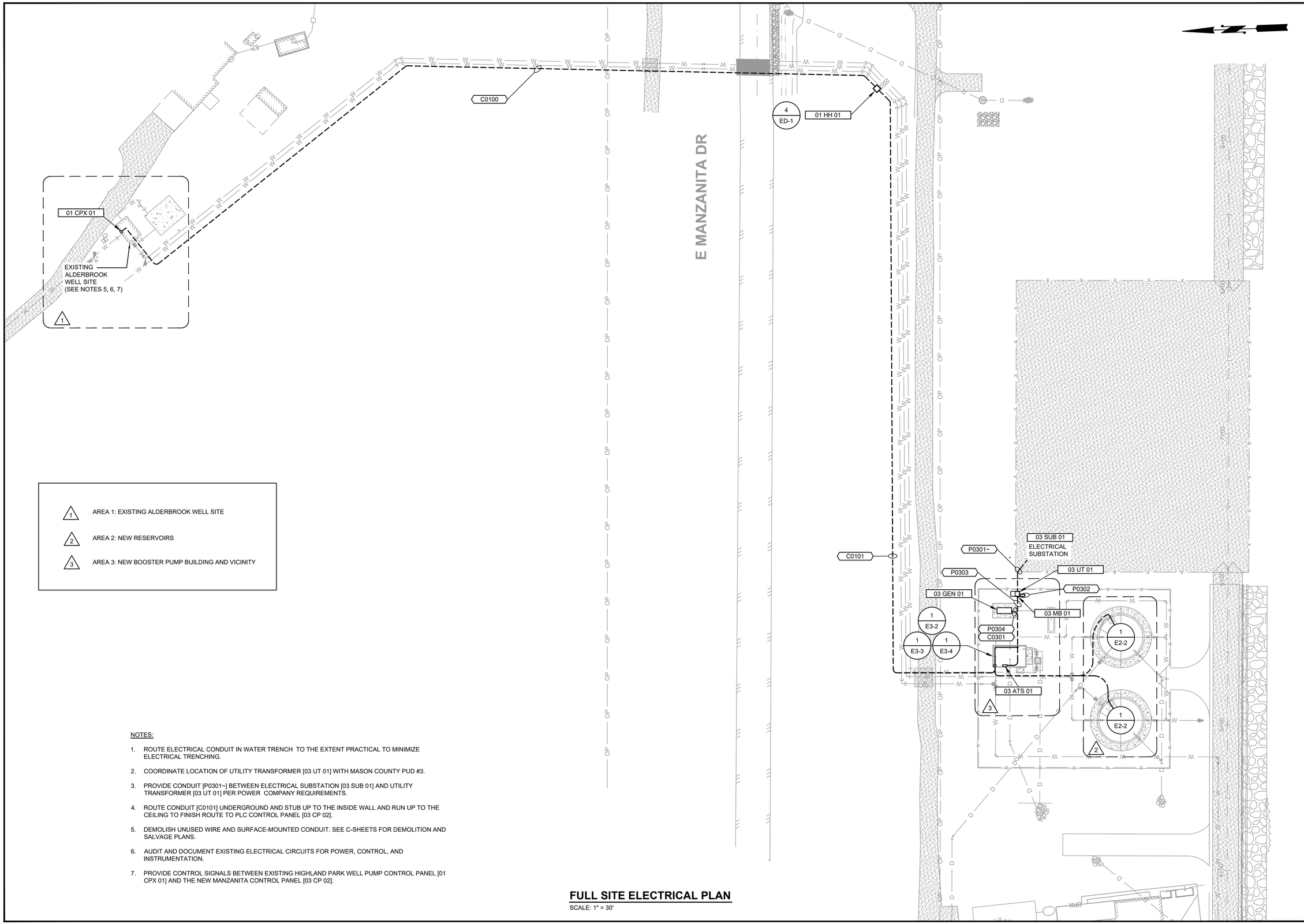

1 AREA 1: EXISTING ALDERBROOK WELL SITE

2 AREA 2: NEW RESERVOIRS

3 AREA 3: NEW BOOSTER PUMP BUILDING AND VICINITY

NOTES:

1. ROUTE ELECTRICAL CONDUIT IN WATER TRENCH TO THE EXTENT PRACTICAL TO MINIMIZE ELECTRICAL TRENCHING.
2. COORDINATE LOCATION OF UTILITY TRANSFORMER [03 UT 01] WITH MASON COUNTY PUD #3.
3. PROVIDE CONDUIT [P0301~] BETWEEN ELECTRICAL SUBSTATION [03 SUB 01] AND UTILITY TRANSFORMER [03 UT 01] PER POWER COMPANY REQUIREMENTS.
4. ROUTE CONDUIT [C0101] UNDERGROUND AND STUB UP TO THE INSIDE WALL AND RUN UP TO THE CEILING TO FINISH ROUTE TO PLC CONTROL PANEL [03 CP 02].
5. DEMOLISH UNUSED WIRE AND SURFACE-MOUNTED CONDUIT. SEE C-SHEETS FOR DEMOLITION AND SALVAGE PLANS.
6. AUDIT AND DOCUMENT EXISTING ELECTRICAL CIRCUITS FOR POWER, CONTROL, AND INSTRUMENTATION.
7. PROVIDE CONTROL SIGNALS BETWEEN EXISTING HIGHLAND PARK WELL PUMP CONTROL PANEL [01 CPX 01] AND THE NEW MANZANITA CONTROL PANEL [03 CP 02].

FULL SITE ELECTRICAL PLAN

SCALE: 1" = 30'

Gray & Osborne, Inc.
CONSULTING ENGINEERS
2102 CARRIAGE DRIVE SW,
BUILDING I
OLYMPIA, WA 98502
(360) 292-7481

DAVID ALAN CALKINS
STATE OF WASHINGTON
43249
REGISTERED
PROFESSIONAL ENGINEER
4/4/2025

MASON COUNTY PUD

MASON COUNTY PUD NO. 1
MANZANITA RESERVOIR AND BOOSTER PUMP STATION
1681 E McREAVY RD
UNION, WA

No.	DATE	REVISION

ISSUED FOR:	BID SET
ISSUE DATE:	APRIL 2025
APPROVED BY:	DAC
CHECKED BY:	JRN
DRAWN BY:	DCK
DESIGNER:	DAC
G & O JOB NO.:	22260.00
FILE:	E_SP.DWG

0 1" 2"
TWO INCHES AT FULL SCALE.
IF NOT, SCALE ACCORDINGLY

ELECTRICAL

SCHEDULE A
FULL SITE ELECTRICAL PLAN

DRAWING: **E-3** OF: **12**

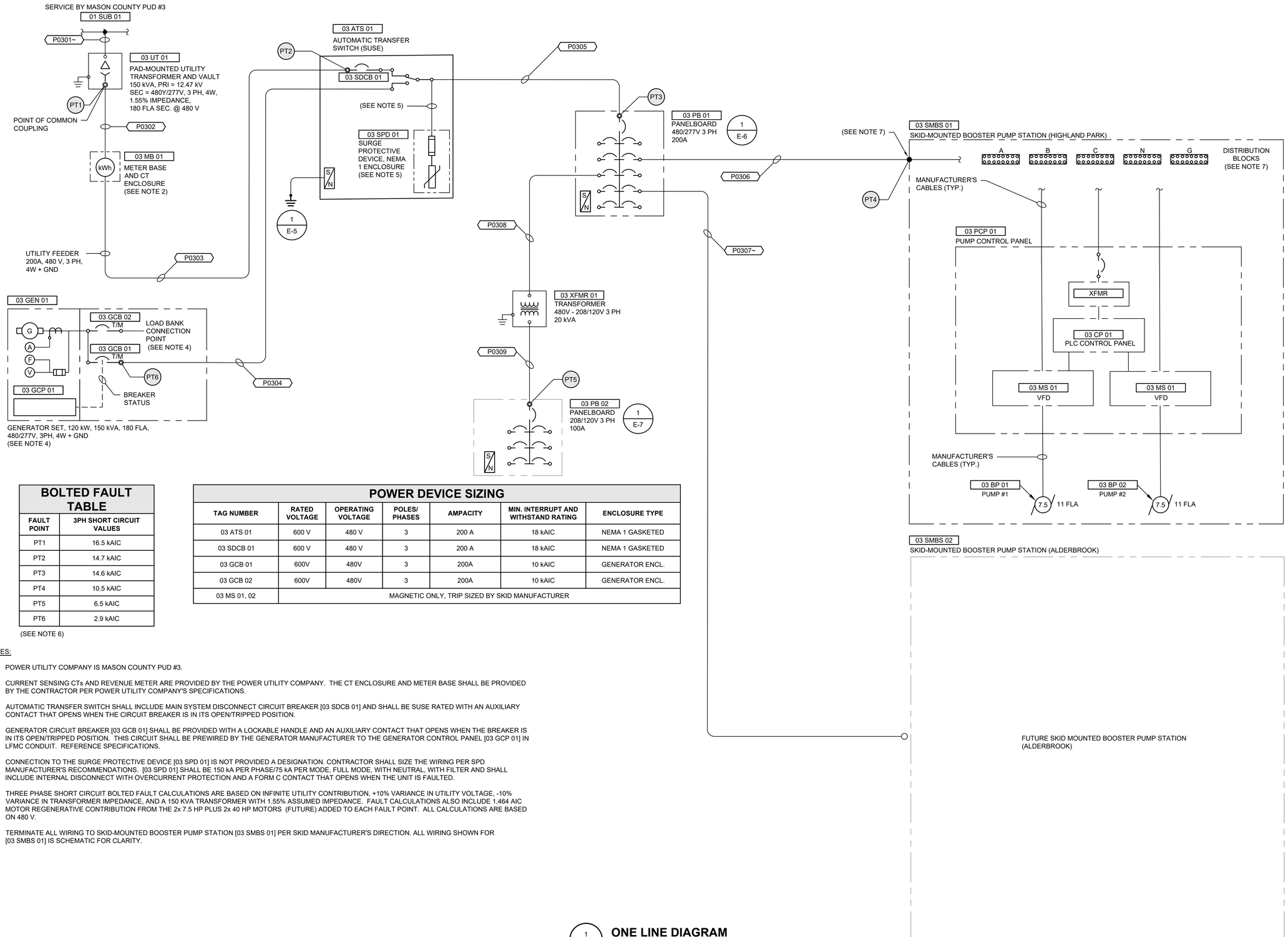

BOLTED FAULT TABLE

FAULT POINT	3PH SHORT CIRCUIT VALUES
PT1	16.5 kAIC
PT2	14.7 kAIC
PT3	14.6 kAIC
PT4	10.5 kAIC
PT5	6.5 kAIC
PT6	2.9 kAIC

(SEE NOTE 6)

POWER DEVICE SIZING

TAG NUMBER	RATED VOLTAGE	OPERATING VOLTAGE	POLES/ PHASES	AMPACITY	MIN. INTERRUPT AND WITHSTAND RATING	ENCLOSURE TYPE
03 ATS 01	600 V	480 V	3	200 A	18 kAIC	NEMA 1 GASKETED
03 SDCB 01	600 V	480 V	3	200 A	18 kAIC	NEMA 1 GASKETED
03 GCB 01	600V	480V	3	200A	10 kAIC	GENERATOR ENCL.
03 GCB 02	600V	480V	3	200A	10 kAIC	GENERATOR ENCL.
03 MS 01, 02	MAGNETIC ONLY, TRIP SIZED BY SKID MANUFACTURER					

NOTES:

1. POWER UTILITY COMPANY IS MASON COUNTY PUD #3.
2. CURRENT SENSING CTs AND REVENUE METER ARE PROVIDED BY THE POWER UTILITY COMPANY. THE CT ENCLOSURE AND METER BASE SHALL BE PROVIDED BY THE CONTRACTOR PER POWER UTILITY COMPANY'S SPECIFICATIONS.
3. AUTOMATIC TRANSFER SWITCH SHALL INCLUDE MAIN SYSTEM DISCONNECT CIRCUIT BREAKER [03 SDCB 01] AND SHALL BE SUSE RATED WITH AN AUXILIARY CONTACT THAT OPENS WHEN THE CIRCUIT BREAKER IS IN ITS OPEN/TRIPPED POSITION.
4. GENERATOR CIRCUIT BREAKER [03 GCB 01] SHALL BE PROVIDED WITH A LOCKABLE HANDLE AND AN AUXILIARY CONTACT THAT OPENS WHEN THE BREAKER IS IN ITS OPEN/TRIPPED POSITION. THIS CIRCUIT SHALL BE PREWIRED BY THE GENERATOR MANUFACTURER TO THE GENERATOR CONTROL PANEL [03 GCP 01] IN LFMC CONDUIT. REFERENCE SPECIFICATIONS.
5. CONNECTION TO THE SURGE PROTECTIVE DEVICE [03 SPD 01] IS NOT PROVIDED A DESIGNATION. CONTRACTOR SHALL SIZE THE WIRING PER SPD MANUFACTURER'S RECOMMENDATIONS. [03 SPD 01] SHALL BE 150 kA PER PHASE/75 kA PER MODE, FULL MODE, WITH NEUTRAL, WITH FILTER AND SHALL INCLUDE INTERNAL DISCONNECT WITH OVERCURRENT PROTECTION AND A FORM C CONTACT THAT OPENS WHEN THE UNIT IS FAULTED.
6. THREE PHASE SHORT CIRCUIT BOLTED FAULT CALCULATIONS ARE BASED ON INFINITE UTILITY CONTRIBUTION, +10% VARIANCE IN UTILITY VOLTAGE, -10% VARIANCE IN TRANSFORMER IMPEDANCE, AND A 150 KVA TRANSFORMER WITH 1.55% ASSUMED IMPEDANCE. FAULT CALCULATIONS ALSO INCLUDE 1,464 AIC MOTOR REGENERATIVE CONTRIBUTION FROM THE 2x 7.5 HP PLUS 2x 40 HP MOTORS (FUTURE) ADDED TO EACH FAULT POINT. ALL CALCULATIONS ARE BASED ON 480 V.
7. TERMINATE ALL WIRING TO SKID-MOUNTED BOOSTER PUMP STATION [03 SMBS 01] PER SKID MANUFACTURER'S DIRECTION. ALL WIRING SHOWN FOR [03 SMBS 01] IS SCHEMATIC FOR CLARITY.

1 / - **ONE LINE DIAGRAM**
ELECTRICAL POWER SOURCE

Gray & Osborne, Inc.
CONSULTING ENGINEERS
2102 CARRIAGE DRIVE SW,
BUILDING I
OLYMPIA, WA 98502
(360) 292-7481

DAVID ALAN CALKINS
STATE OF WASHINGTON
43249
REGISTERED PROFESSIONAL ENGINEER
4/4/2025

MASON COUNTY PUD

MASON COUNTY PUD NO. 1
MANZANITA RESERVOIR AND BOOSTER PUMP STATION
1681 E McREAVY RD
UNION, WA

No.	DATE	REVISION

ISSUED FOR:	BID SET
ISSUE DATE:	APRIL 2025
APPROVED BY:	DAC
CHECKED BY:	JRN
DRAWN BY:	DCK
DESIGNER:	DAC
G & O JOB NO.:	22260.00
FILE:	E_OLD.DWG

ELECTRICAL

SCHEDULE A
ONE-LINE DIAGRAM

DRAWING: **E-4** OF: **12**

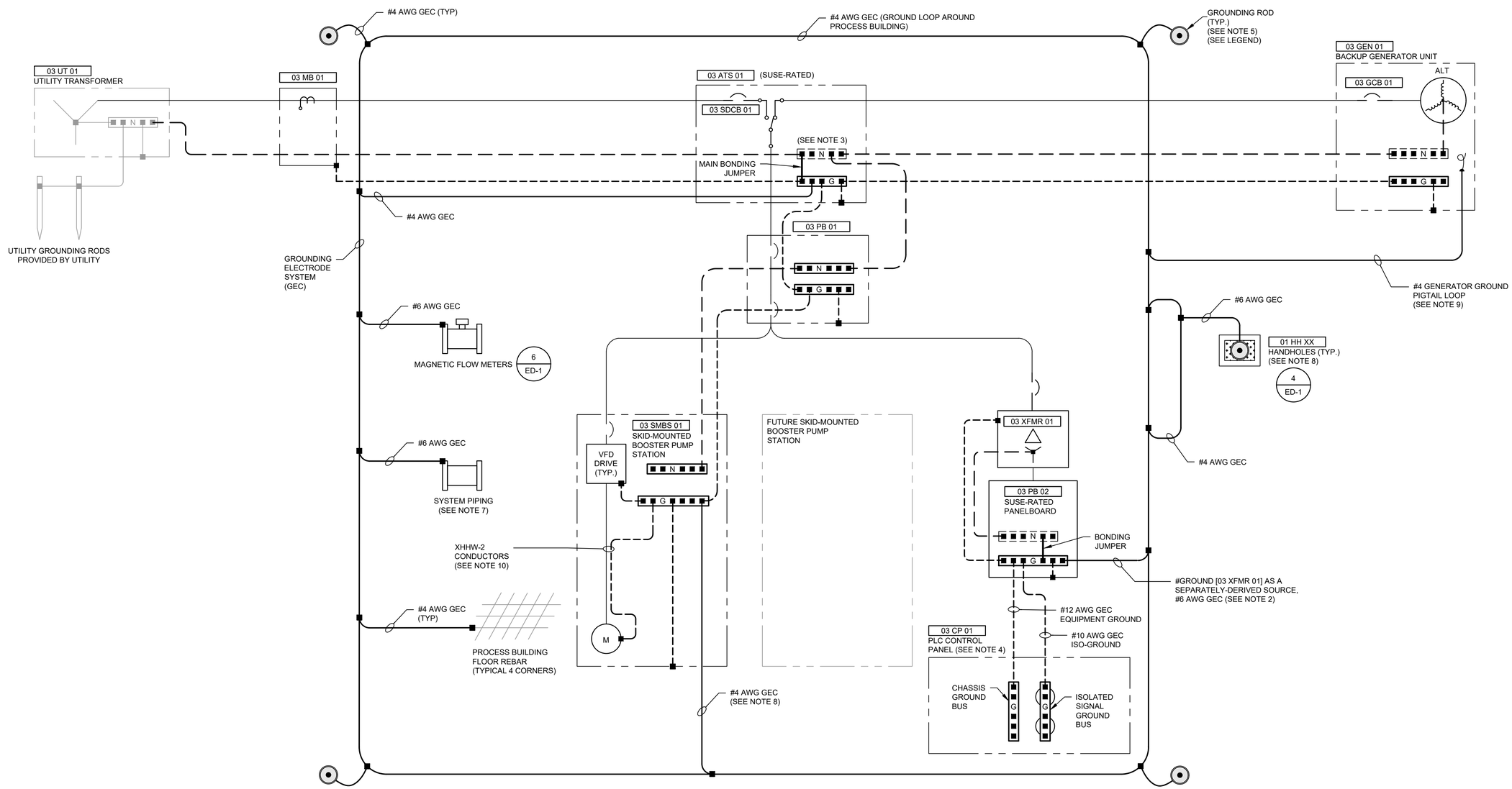

NOTES:

1. REFERENCE GROUNDING SPECIFICATION.
2. ALL POWER TRANSFORMERS ARE CONSIDERED SEPARATELY DERIVED SOURCES AND SHALL BE GROUNDED APPROPRIATELY. SMALL CONTROL TRANSFORMERS DEDICATED TO DRIVES AND CONTROLS ARE NOT CONSIDERED SEPARATELY DERIVED. GROUND SEPARATELY-DERIVED SOURCE [03 XFMR 01] TO THE GROUND LOOP USING AN INSULATED, GREEN, #6 AWG GEC.
3. NEUTRAL CONDUCTORS SHALL BE PROVIDED FROM THE SUSE NEUTRAL IN [03 ATS 01] TO [03 PB 01]. NEUTRAL IS NOT SWITCHED IN THE ATS UNIT.
4. THE ISOLATED GROUND BUS IN [03 CP 02] IS NOT CONNECTED TO [03 CP 02] CHASSIS GROUND BUS, BUT THEY ARE AT THE SAME POTENTIAL.
5. DRIVE 10' X 3/4" GROUND RODS AT EACH CORNER OF [01 BLDG 01]. CONNECT TO GROUND LOOP WITH #2/0 BARE COPPER GECs BURIED AT A DEPTH OF 30" MINIMUM.

   GROUND ROD CONNECTIONS SHALL BE ACCESSIBLE FROM WITHIN GROUND BOXES. (3 / ED-1)
6. BARE GROUND WIRES EMERGING FROM CONCRETE SHALL BE PROTECTED WITH PVC SCHEDULE 40 CONDUIT SLEEVES PER (2 / ED-1).
7. RUN A #4 AWG BARE COPPER GEC TO ALL METAL PROCESS PIPING GREATER THAN 6-INCH DIAMETER PENETRATING THE CONCRETE FLOOR. CONNECT THE GROUND AT THE CLOSEST BOLT NEAREST THE FLOOR. ARRANGE THE WIRE TO PREVENT A TRIP HAZARD.
8. RUN ADDITIONAL #4 AWG BARE COPPER GECs BETWEEN THE GROUND LOOP AND EACH BOOSTER SKID, HANDHOLE, PULL BOX, AND VAULT.
9. PROVIDE A GROUND PIGTAIL FROM THE GROUND LOOP JUST UNDER GENERATOR CIRCUIT BREAKER [03 GCB 01]. CONNECT TO GENERATOR GROUND BUS IF REQUIRED BY L&I INSPECTOR.
10. CONDUCTORS FROM VFD MOTOR STARTERS TO THEIR ASSOCIATED MOTORS SHALL PROVIDED AND ROUTED BY THE BOOSTER SKID MANUFACTURER. ALL POWER AND CONTROL WIRING INTERNAL TO THE BOOSTER SKID SHALL BE PROVIDED AND ROUTED BY THE BOOSTER SKID MANUFACTURER.

(1 / -) **GROUNDING ONE LINE DIAGRAM**
NOT TO SCALE

GROUNDING LEGEND	
	POWER CONDUCTORS
	NEUTRAL CONDUCTORS
	EQUIPMENT GROUND CONDUCTORS
	GROUNDING ELECTRODE CONDUCTORS (GEC)
	GROUNDING ELECTRODE TAP
N	NEUTRAL BUS
G	GROUND BUS
	GROUNDING ROD BOX W/ 10' X ¾" GROUNDING ROD

Gray & Osborne, Inc.
CONSULTING ENGINEERS
2102 CARRIAGE DRIVE SW, BUILDING I
OLYMPIA, WA 98502
(360) 292-7481

DAVID ALAN CALKINS
STATE OF WASHINGTON
43249
REGISTERED PROFESSIONAL ENGINEER
4/4/2025

MASON COUNTY PUD

MASON COUNTY PUD NO. 1
MANZANITA RESERVOIR AND BOOSTER PUMP STATION
1681 E McREAVY RD
UNION, WA

No.	DATE	REVISION

ISSUED FOR:	BID SET
ISSUE DATE:	APRIL 2025
APPROVED BY:	DAC
CHECKED BY:	JRN
DRAWN BY:	DCK
DESIGNER:	DAC
G & O JOB NO.:	22260.00
FILE:	E_OLD.DWG

ELECTRICAL

SCHEDULE A GROUNDING ONE-LINE DIAGRAM

DRAWING: **E-5** OF: **12**

PANELBOARD [03 PB 01] SCHEDULE

CKT. NO.	DIRECTORY	PHASE A VA	PHASE A A	PHASE B VA	PHASE B A	PHASE C VA	PHASE C A	LOAD TYPE	BKR AMPS	BUS	BKR AMPS	LOAD TYPE	PHASE A VA	PHASE A A	PHASE B VA	PHASE B A	PHASE C VA	PHASE C A	DIRECTORY	CKT. NO.
1	[03 SMBS 01], SKID-MOUNTED BOOSTER PUMP STATION (HIGHLAND PARK)	5,577	21.0					M	3/50	A	3/150	Z	-	-					SPARE BREAKER - FUTURE SKID	2
3	[03 SMBS 01], SKID-MOUNTED BOOSTER PUMP STATION (HIGHLAND PARK)			5,577	21.0			M	|	B	|	Z			-	-			SPARE BREAKER - FUTURE SKID	4
5	[03 SMBS 01], SKID-MOUNTED BOOSTER PUMP STATION (HIGHLAND PARK)					5,577	21.0	M	|	C	|	Z					-	-	SPARE BREAKER - FUTURE SKID	6
7	[03 XFMR 01], TRANSFORMER	4,484	16.2					Z	3/35	A	---	Z	-	-					COVERED SPACE	8
9	[03 XFMR 01], TRANSFORMER			4,484	16.2			Z	|	B	---	Z			-	-			COVERED SPACE	10
11	[03 XFMR 01], TRANSFORMER					4,484	16.2	Z	|	C	---	Z					-	-	COVERED SPACE	12
13	COVERED SPACE	-	-					Z	---	A	---	Z	-	-					COVERED SPACE	14
15	COVERED SPACE			-	-			Z	---	B	---	Z			-	-			COVERED SPACE	16
17	COVERED SPACE					-	-	Z	---	C	---	Z					-	-	COVERED SPACE	18
	SUM OF PHASE LOADS	10,062	37.2	10,062	37.2	10,062	37.2						0	0.0	0	0.0	0	0.0	**SUM OF PHASE LOADS**	

[03 PB 01] ELECTRICAL AND CONSTRUCTION SPECIFICATIONS:

CONFIGURATION:	480/277 VAC, 3 PH, 60 Hz
POWER BUS:	225 A, COPPER
NEUTRAL BUS:	225 A (100% OF POWER BUS), ISOLATED FROM GROUND, SOLDERLESS CONNECTIONS
GROUND BUS:	PROVIDE PER UL 67
BUS BRACING:	22 kAIC, MINIMUM
MAIN BREAKER:	200 AT, 225 AF, 3 PH, 3 P, 22 kAIC, MOLDED CASE, VERTICAL MOUNTING
DISTRIBUTION BREAKERS:	BOLT-ON, MOLDED CASE, 22 kAIC, MINIMUM
GROUND BONDING:	SUITABLE FOR SERVICE ENTRY
ENCLOSURE:	NEMA 1 GASKETED
NUMBER OF CIRCUITS:	18
UNCOMMITTED CIRCUITS:	BLANK COVERS
POWER DERIVED FROM:	[03 UT 01], UTILITY TRANSFORMER
BUS BREAKERS:	3 POLE BREAKERS, 1x 150 A, 22 kAIC
	3 POLE BREAKERS, 1x 50 A, 22 kAIC
	3 POLE BREAKERS, 1x 35 A, 22 kAIC

LEGEND:

GFCI DENOTES GFCI PANELBOARD CIRCUIT BREAKER.

NOTES:

1. THE CONTRACTOR SHALL PROVIDE A TYPED PANELBOARD SCHEDULE FOR ALL ACTUAL LOAD ASSIGNMENTS.
2. AIC RATING OF BRANCH CIRCUIT BREAKERS MAY BE REDUCED WHEN SUBMITTED TO ENGINEERING IF THEY ARE SHOWN TO BE A PART OF A TESTED AND LISTED COMBINATION WITH MAIN PANELBOARD BREAKER AND COMPLIANT TO NEC 240.86 AND MARKED PER NEC 110.22. BRANCH BREAKERS SHALL BE NO LESS THAN 10 kAIC.
3. SIZED TO POWER FUTURE ALDERBROOK WATER SYSTEM.

LOAD DISTRIBUTION:	AMPS	VA	%
BY PHASE:			
TOTAL LOAD, PHASE A:	37.2 A	10,062 VA	33.3%
TOTAL LOAD, PHASE B:	37.2 A	10,062 VA	33.3%
TOTAL LOAD, PHASE C:	37.2 A	10,062 VA	33.3%
BY LOAD TYPE:			
TOTAL LIGHTING (L):		0 VA	0.0%
TOTAL MOTOR (M):		16,732 VA	55.4%
TOTAL HVAC (H):		0 VA	0.0%
TOTAL RECEPTACLE (R):		0 VA	0.0%
TOTAL OTHER (Z):		13,453 VA	44.6%
TOTAL CONNECTED LOAD:		30.19 kVA	100.0%
TOTAL CALCULATED (NEC) LOAD:		34.37 kVA	

XFMR LOADING (CONNECTED) =	30.2 kVA / 200 kVA =	15.1 %
XFMR LOADING (NEC) =	34.4 kVA / 200 kVA =	17.2 %

Gray & Osborne, Inc.
CONSULTING ENGINEERS
2102 CARRIAGE DRIVE SW, BUILDING I
OLYMPIA, WA 98502
(360) 292-7481

DAVID ALAN CALKINS
STATE OF WASHINGTON
43249
REGISTERED PROFESSIONAL ENGINEER
4/4/2025

MASON COUNTY PUD

MASON COUNTY PUD NO. 1
MANZANITA RESERVOIR AND BOOSTER PUMP STATION
1681 E McREAVY RD
UNION, WA

No.	DATE	REVISION

ISSUED FOR:	BID SET
ISSUE DATE:	APRIL 2025
APPROVED BY:	DAC
CHECKED BY:	JRN
DRAWN BY:	DCK
DESIGNER:	DAC
G & O JOB NO.:	22260.00
FILE:	E_PB.DWG

ELECTRICAL

SCHEDULE A
[03 PB 01] PANELBOARD SCHEDULE, SPECIFICATION, AND LOAD DISTRIBUTION

DRAWING: **E-6** OF: **12**

PANELBOARD [03 PB 02] SCHEDULE

CKT. NO.	DIRECTORY	PHASE A VA	PHASE A A	PHASE B VA	PHASE B A	PHASE C VA	PHASE C A	LOAD TYPE	BKR AMPS	BUS	BKR AMPS	LOAD TYPE	PHASE A VA	PHASE A A	PHASE B VA	PHASE B A	PHASE C VA	PHASE C A	DIRECTORY	CKT. NO.
1	BOOSTER PUMP BUILDING EXTERIOR LIGHTING	108	0.9					L	1/20	A	1/20	Z	250	2.1					[03 AD 01], AUTODIALER	2
3	SPARE BREAKER			-	-			Z	1/20	B	1/20	Z			1,500	12.5			[03 CP 02], CONTROL PANEL, PLC, BOOSTER PUMP BUILDING PRIMARY	4
5	[03 HT 01], HEATER, BOOSTER PUMP BUILDING					1,500	14.4	H	2/20	C	1/20	Z					1,500	12.5	[03 CP 02], CONTROL PANEL, PLC, BOOSTER PUMP BUILDING ANCILLARY	6
7	[03 HT 01], HEATER, BOOSTER PUMP BUILDING	1,500	14.4					H	|	A	1/20	H	1,127	9.4					[03 EF 01], EXHAUST FAN, BOOSTER PUMP BUILDING	8
9	CONVENIENCE RECEPTACLES			1,440	12.0			R	1/20	B	1/20	Z			-	-			SPARE BREAKER	10
11	[03 EF 01], EXHAUST FAN, BOOSTER PUMP BUILDING					667	5.6	H	1/20	C	1/20	L					201	1.7	BOOSTER PUMP BUILDING INTERIOR LIGHTING	12
13	SPARE BREAKER	-	-					Z	1/20	A	2/20	Z	875	8.4					[03 GADP 01], GENERATOR AUXILIARY DEVICE PANEL	14
15	SPARE BREAKER			-	-			Z	1/20	B	|	Z			875	8.4			[03 GADP 01], GENERATOR AUXILIARY DEVICE PANEL	16
17	SPARE BREAKER					-	-	Z	1/20	C	1/20	Z					-	-	SPARE BREAKER	18
19	SPARE BREAKER	-	-					Z	1/20	A	1/20	Z	-	-					SPARE BREAKER	20
21	SPARE BREAKER			-	-			Z	1/20	B	1/20	Z			-	-			SPARE BREAKER	22
23	SPARE BREAKER					-	-	Z	1/20	C	1/20	Z					-	-	SPARE BREAKER	24
	SUM OF PHASE LOADS	1,608	15.3	1,440	12.0	2,167	20.0						2,252	19.9	2,375	20.9	1,701	14.2	**SUM OF PHASE LOADS**	

[03 PB 02] ELECTRICAL AND CONSTRUCTION SPECIFICATIONS:

CONFIGURATION:	208/120 VAC, 3 PH, 60 Hz
POWER BUS:	100 A, COPPER
NEUTRAL BUS:	100 A (100% OF POWER BUS), ISOLATED FROM GROUND, SOLDERLESS CONNECTIONS
GROUND BUS:	PROVIDE PER UL 67
BUS BRACING:	10 kAIC, MINIMUM
MAIN BREAKER:	100 AT, 100 AF, 3 PH, 3 P, 10 kAIC, MOLDED CASE, VERTICAL MOUNTING
DISTRIBUTION BREAKERS:	BOLT-ON, MOLDED CASE, 10 kAIC, MINIMUM
GROUND BONDING:	SUITABLE FOR SERVICE ENTRY
ENCLOSURE:	NEMA 12
NUMBER OF CIRCUITS:	24
UNCOMMITTED CIRCUITS:	FILL WITH SPARE 10 kAIC BREAKERS AS SHOWN IN THE SCHEDULE
POWER DERIVED FROM:	[03 XFMR 01], TRANSFORMER
BUS BREAKERS:	2 POLE BREAKERS, 2x 20 A, 10 kAIC
	1 POLE BREAKERS, 20x 20 A, 10 kAIC

LEGEND:

GFCI DENOTES GFCI PANELBOARD CIRCUIT BREAKER.

NOTES:

1. THE CONTRACTOR SHALL PROVIDE A TYPED PANELBOARD SCHEDULE FOR ALL ACTUAL LOAD ASSIGNMENTS.
2. AIC RATING OF BRANCH CIRCUIT BREAKERS MAY BE REDUCED WHEN SUBMITTED TO ENGINEERING IF THEY ARE SHOWN TO BE A PART OF A TESTED AND LISTED COMBINATION WITH MAIN PANELBOARD BREAKER AND COMPLIANT TO NEC 240.86 AND MARKED PER NEC 110.22. BRANCH BREAKERS SHALL BE NO LESS THAN 10 kAIC.

LOAD DISTRIBUTION:	AMPS	VA	%
BY PHASE:			
TOTAL LOAD, PHASE A:	35.2 A	3,860 VA	34.4%
TOTAL LOAD, PHASE B:	32.9 A	3,815 VA	32.2%
TOTAL LOAD, PHASE C:	34.2 A	3,868 VA	33.4%
BY LOAD TYPE:			
TOTAL LIGHTING (L):		309 VA	2.7%
TOTAL MOTOR (M):		0 VA	0.0%
TOTAL HVAC (H):		4,794 VA	41.5%
TOTAL RECEPTACLE (R):		1,440 VA	12.5%
TOTAL OTHER (Z):		5,000 VA	43.3%
TOTAL CONNECTED LOAD:		11.54 kVA	100.0%
TOTAL CALCULATED (NEC) LOAD:		11.62 kVA	

XFMR LOADING (CONNECTED) =	11.5 kVA / 20 kVA =	57.7 %
XFMR LOADING (NEC) =	11.6 kVA / 20 kVA =	58.1 %

Gray & Osborne, Inc.
CONSULTING ENGINEERS
2102 CARRIAGE DRIVE SW, BUILDING I
OLYMPIA, WA 98502
(360) 292-7481

DAVID ALAN CALKINS, STATE OF WASHINGTON, 43249, REGISTERED PROFESSIONAL ENGINEER
4/4/2025

MASON COUNTY PUD

MASON COUNTY PUD NO. 1
MANZANITA RESERVOIR AND BOOSTER PUMP STATION
1681 E McREAVY RD
UNION, WA

No.	DATE	REVISION

ISSUED FOR:	BID SET
ISSUE DATE:	APRIL 2025
APPROVED BY:	DAC
CHECKED BY:	JRN
DRAWN BY:	DCK
DESIGNER:	DAC
G & O JOB NO.:	22260.00
FILE:	E_PB.DWG

ELECTRICAL

SCHEDULE A

[03 PB 02] PANELBOARD SCHEDULE, SPECIFICATION, AND LOAD DISTRIBUTION

DRAWING: **E-7** OF: **12**

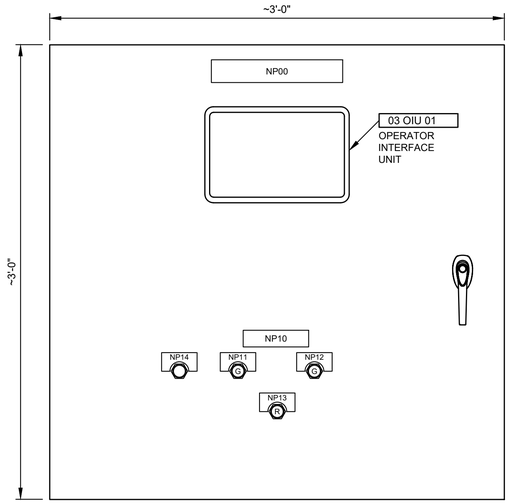

A
-

CONTROL PANEL
[03 CP 02] EXTERIOR ELEVATION
NOT TO SCALE

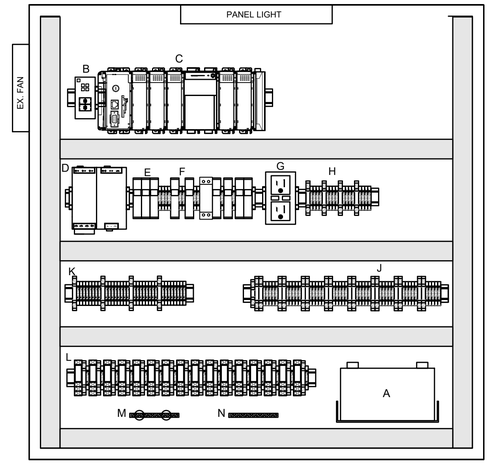

B
-

CONTROL PANEL
[03 CP 02] INTERIOR ELEVATION
NOT TO SCALE

PANEL DOOR NAMEPLATE SCHEDULE		
ITEM NUMBER	TAG/DEVICE NUMBER	ITEM FUNCTION
NP00	[03 CP 02]	MASON COUNTY PUD #1 SITE PLC CONTROL PANEL [03 CP 02]
NP10		CONTROL POWER STATUS
NP11		120 VAC VALID (PILOT, GREEN)
NP12		24 VDC BUS VALID (PILOT, GREEN)
NP13		PLC FAIL (PILOT, RED)
NP14		SMOKE DETECTOR RESET (PUSHBUTTON, RED)

[03 CP 02] DEVICE SCHEDULE	
ITEM NUMBER	DEVICE OR FUNCTION
A	BATTERIE(S)
B	ETHERNET SWITCH
C	PROGRAMMABLE LOGIC CONTROLER [03 PLC 02]
D	24 VDC POWER SUPPLY AND UPS SYSTEM
E, F	120 VAC PRIMARY AND ANCILLARY POWER CIRCUITS
G	15A, 120 VAC GFCI CONVENIENCE RECEPTACLE [03 CREC 01]
H	ANALOG OUTPUT FUSING AND TERMINALS
J	ANALOG INPUT FUSING AND TERMINALS
K	DIGITAL INPUT FUSING AND TERMINALS
L	DIGITAL OUTPUT FUSING, TERMINALS, AND BUFFER RELAYS
M	ISO GROUND BUS
N	GROUND BUS

PLC AND OIU PROGRAMMING:

1. PROGRAM REGISTERS FOR ALL I/O SHOWN IN THE PLANS.
2. PROVIDE A MINIMUM OF ONE OIU SCREEN FOR EACH OF THE FOLLOWING: ALARMS, RESERVOIR LEVELS, DISTRIBUTION FLOWS
3. PROGRAM PLC OUTPUTS/AUTODAILER INPUTS AS FOLLOWS:
   A. TANK INTRUSION SWITCHES SHALL BE NORMALLY CLOSED, PROGRAMMED IN SERIES SUCH THAT ANY INTRUSION GENERATES A LOSS OF SIGNAL TO THE AUTODIALER. SEPARATE ALARMS BY TANK.
   B. GENERATOR MAJOR ALARM SHALL BE NORMALLY OPEN, PROGRAMMED IN PARALLEL SUCH THAT [GENERATOR GENERAL ALARM] OR [GENERATOR FAIL] OR [HIGH COOLANT TEMP] WILL GENERATE AN INPUT TO THE AUTODIALER.
   C. GENERATOR MINOR ALARM SHALL BE NORMALLY OPEN, PROGRAMMED IN PARALLEL SUCH THAT [LOW BATTERY] OR [LOW OIL PRESSURE] WILL GENERATE AN INPUT TO THE AUTODIALER.
   D. PUMP MAJOR ALARM SHALL BE NORMALLY CLOSED, HELD OPEN, AND WIRED IN PARALLEL SUCH THAT [PLC FAIL] OR [POWER FAILURE] WILL GENERATE AN INPUT TO THE AUTODIALER,
   E. PUMP MINOR ALARM SHALL BE NORMALLY OPEN, WIRED IN PARALLEL SUCH THAT [PUMP NO.1 FAIL] OR [PUMP NO. 2 FAIL] WILL GENERATE AN INPUT TO THE AUTODIALER.
4. PROGRAM NEW CALL TO HIGHLAND PARK WELL AS FOLLOWS:
   A. EACH RESERVOIR HAS ON/OFF FLOAT LEVELS (REFERENCE M-SHEETS). EITHER TANK SHALL BE ABLE TO CALL THE WELL PUMP ON.
   B. HIGH LEVEL ALARMS SHALL BE A FAILSAFE TO PREVENT THE CALL THE WELL PUMP.
   C. LOW LEVEL ALARMS SHALL BE A FAILSAFE TO REMOVE THE CALL TO THE WELL PUMP.

SHEET NOTES:

1. PROVIDE A FRONT PANEL NAMEPLATE STATING:

   MASON COUNTY PUD #1
   SITE PLC CONTROL PANEL
   [03 CP 02]

2. PLC CONTROL PANEL [03 CP 02] SHALL BE 36"H (MIN) X 36"W X 12"D, 12-GAUGE STEEL, NEMA 1 GASKETED, OPEN BOTTOM, WITH LEFT HAND (HINGE ON LEFT SIDE) PAD-LOCKABLE 3-POINT LATCH DOOR. PROVIDE A DOOR-CATCH ON THE HINGED SIDE TO HOLD THE DOOR IN THE OPEN POSITION.
3. DEVICE LOCATIONS ON THIS SHEET SHOW A LAYOUT INTENT AND MAY BE PLACED OTHERWISE AS REQUIRED FOR BEST FIT AND ACCESS BY THE OPERATORS. MAINTAIN 60 INCH HEIGHT FROM FLOOR TO CENTERLINE OF THE OIU. PROVIDE SIDE PANEL FOR SECOND BATTERY IF REQUIRED.
4. SHADED AREAS REPRESENT WIREWAYS. PROVIDE SIDE PANEL IF MORE AREA IS REQUIRED TO MOUNT COMPONENTS.

Gray & Osborne, Inc.
CONSULTING ENGINEERS
2102 CARRIAGE DRIVE SW,
BUILDING I
OLYMPIA, WA 98502
(360) 292-7481

DAVID ALAN CALKINS
STATE OF WASHINGTON
43249
REGISTERED
PROFESSIONAL ENGINEER
4/4/2025

MASON COUNTY PUD NO. 1
MANZANITA RESERVOIR AND BOOSTER PUMP STATION
1681 E McREAVY RD
UNION, WA

No.	DATE	REVISION

ISSUED FOR:	BID SET
ISSUE DATE:	APRIL 2025
APPROVED BY:	DAC
CHECKED BY:	JRN
DRAWN BY:	DCK
DESIGNER:	DAC
G & O JOB NO.:	22260.00
FILE:	E_CPEL.DWG

ELECTRICAL

SCHEDULE A
SITE CONTROL PANEL
[03 CP 02] ELEVATIONS

DRAWING: **E-8** OF: **12**

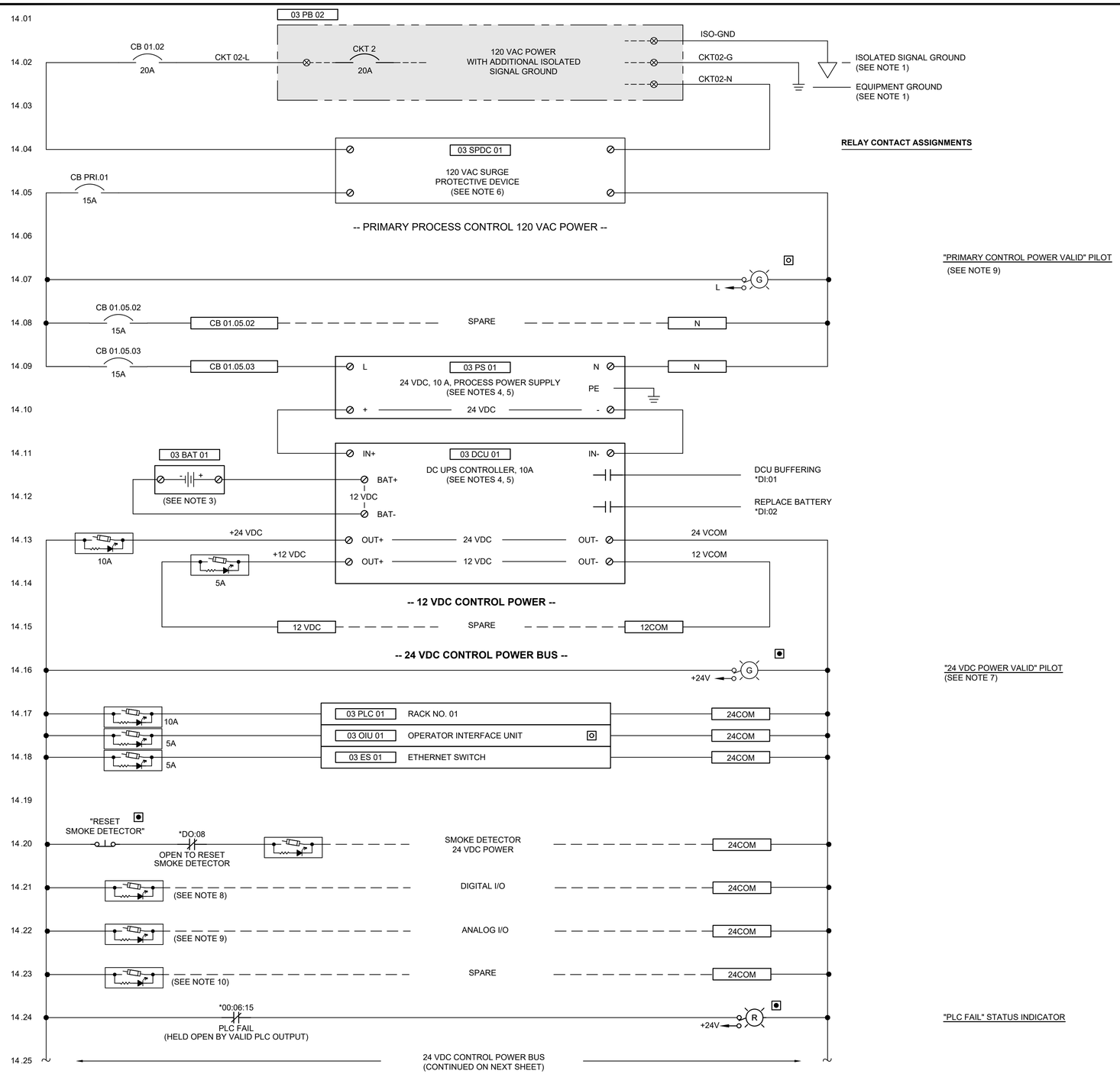

1 / - **PLC CONTROL PANEL [03 CP 02] ELEMENTARY WIRING DIAGRAM**

POWER SUPPLY AND DISTRIBUTION (DUAL SUPPLY, SINGLE POWER SOURCE)

NOTES:

1. PROVIDE A DEDICATED GROUND STRIP FOR ANALOG INPUT AND OUTPUT SHIELDS. THIS GROUND IS DERIVED FROM THE GROUND BUS OF PANELBOARD [03 PB 02] AND IS RUN SEPARATELY TO [03 CP 01] THROUGH A #10 AWG STRANDED COPPER CONDUCTOR WITH GREEN INSULATION. SIGNAL GROUNDS IN [03 CP 02] ARE ISOLATED FROM CHASSIS\EQUIPMENT GROUND BUT ARE AT THE SAME POTENTIAL.
2. THIS CIRCUIT USES REDUNDANT BATTERY-BACKED, 10 A, 24 VDC, DC UPS SYSTEMS TO ESTABLISH 24 VDC SYSTEM CONTROL POWER. ALL CONTROLS OPERATE AT 24 VDC.
3. THE INTEGRATOR SHALL CALCULATE AND SIZE BACK-UP BATTERIES FOR 1 HOUR (MINIMUM) OF 24 VDC POWER, WITH ALL CONNECTED LOADS ACTIVE. THESE CALCULATIONS SHALL BE PRESENTED TO ENGINEERING DURING SUBMITTAL.
4. ALL POWER SUPPLIES, CONVERTERS, AND UPS DEVICES SHALL BE INDUSTRIAL, PACKAGED, MANUFACTURERED, UL-LISTED, DIN-RAIL DEVICES. CUSTOM-BUILT CIRCUIT BOARDS AND LOOSE ELECTRONIC DEVICES SHALL NOT BE ALLOWED.
5. THIS 24 VDC POWER SYSTEM IS DESIGNED AROUND THE FOLLOWING DEVICES:
   a. [03 PS 01, 02], 120 VAC/24 VDC, 10A, POWER SUPPLY — PULS #QS10.241
   b. [03 DCU 01, 02], 24 VDC-24/12 VDC, 10A, DC-UPS CONTROLLER — PULS #UB10.245
   c. [03 DCM 01], 02], 2X 10A, 60 VDC MAX. DECOUPLING DIODE MODULE — PULS #YR2.DIODE

   THESE UNITS MAY BE REPLACED WITH "OR EQUAL" DEVICES.
6. CONTROL POWER SURGE PROTECTIVE DEVICES SHALL BE 120 VAC, 40 kA, 1" WIDE, DIN-RAIL; COOPER BUSSMAN SERIES BSPMA1_S2GR OR EQUIVALENT.
7. ALL 120 VAC RELAYS SHALL BE PROTECTED WITH MOVs. ALL 24 VDC RELAYS SHALL BE PROTECTED WITH REVERSE-BIASED SURGE PROTECTION DIODES.
8. ALL PILOT LIGHTS IN [03 CP 02] SHALL BE LED PUSH-TO-TEST TYPE.
9. FUSED DIGITAL I/O DISTRIBUTION SHOWN HERE REPRESENTS THE REQUIREMENT FOR GENERAL DIGITAL I/O POWER DISTRIBUTION. FUSE DIGITAL I/O PER SPECIFICATION.
10. FUSED ANALOG I/O DISTRIBUTION SHOWN HERE REPRESENTS THE REQUIREMENT FOR GENERAL ANALOG I/O POWER DISTRIBUTION. FUSE ANALOG I/O PER SPECIFICATION.
11. FUSED 24 VDC SPARE CONTROL POWER DISTRIBUTION SHOWN HERE REPRESENTS A GENERAL REQUIREMENT. PROVIDE 4 SPARE FUSED TERMINAL BLOCKS WITH AN ASSOCIATED 24VCOM TERMINAL MOUNTED ADJACENT TO EACH FUSE.

Gray & Osborne, Inc.
CONSULTING ENGINEERS
2102 CARRIAGE DRIVE SW,
BUILDING I
OLYMPIA, WA 98502
(360) 292-7481

DAVID ALAN CALKINS
STATE OF WASHINGTON
43249
PROFESSIONAL ENGINEER
4/4/2025

MASON COUNTY PUD

MASON COUNTY PUD NO. 1
MANZANITA RESERVOIR AND BOOSTER PUMP STATION
1681 E McREAVY RD
UNION, WA

No.	DATE	REVISION

ISSUED FOR:	BID SET
ISSUE DATE:	APRIL 2025
APPROVED BY:	DAC
CHECKED BY:	JRN
DRAWN BY:	DCK
DESIGNER:	DAC
G & O JOB NO.:	22260.00
FILE:	E_CPEWD.DWG

ELECTRICAL

SCHEDULE A
CONTROL PANEL [03 CP 02] ELEMENTARY WIRING DIAGRAM

DRAWING: **E-9** OF: **12**

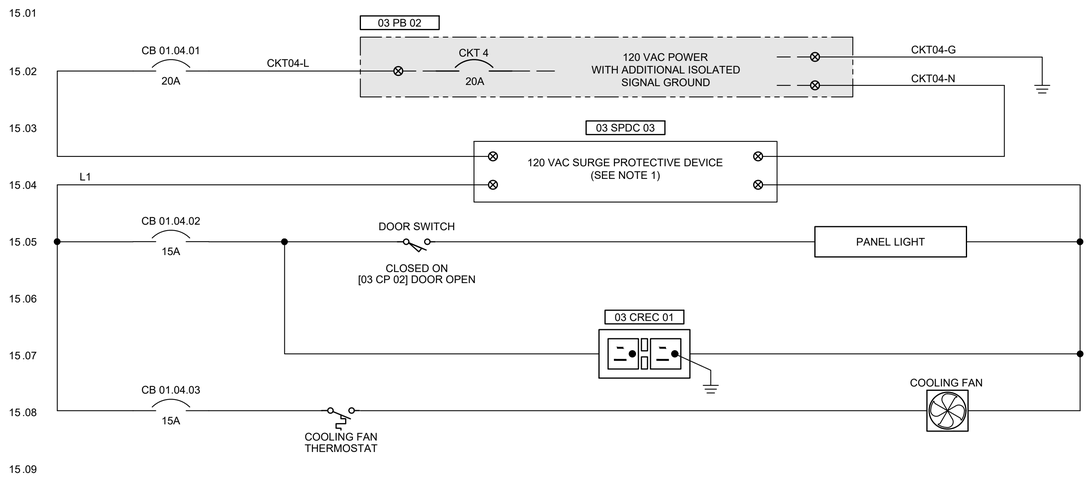

RELAY CONTACT ASSIGNMENTS

DOOR-ACTIVATED PANEL LIGHT FOR [03 CP 02]
(SEE NOTE 3)

GFCI CONVENIENCE RECEPTACLE FOR [03 CP 02]
(SEE NOTE 2)

COOLING FAN

NOTES:

1. SEE NOTE 6 ON 1/E-9.
2. [03 CREC 01] SHALL BE 15A, 120 VAC, GFCI, DIN-RAIL MOUNTED.
3. PROVIDE PANEL LIGHT AS 120 VAC, LED TYPE.

SHADED DEVICES ON THIS SHEET ARE REMOTE FROM [02 CP 01].

1 / - RTU CONTROL PANEL [03 CP 02] ANCILLARY CONTROL ELEMENTARY WIRING DIAGRAM

ANCILLARY CIRCUITS

Gray & Osborne, Inc.
CONSULTING ENGINEERS
2102 CARRIAGE DRIVE SW,
BUILDING I
OLYMPIA, WA 98502
(360) 292-7481

DAVID ALAN CALKINS
STATE OF WASHINGTON
43249
REGISTERED
PROFESSIONAL ENGINEER
4/4/2025

MASON COUNTY PUD

MASON COUNTY PUD NO. 1
MANZANITA RESERVOIR AND BOOSTER PUMP STATION
1681 E McREAVY RD
UNION, WA

No.	DATE	REVISION

ISSUED FOR:	BID SET
ISSUE DATE:	APRIL 2025
APPROVED BY:	DAC
CHECKED BY:	JRN
DRAWN BY:	DCK
DESIGNER:	DAC
G & O JOB NO.:	22260.00
FILE:	E_CPEWD.DWG

ELECTRICAL

SCHEDULE A CONTROL PANEL [03 CP 02] ELEMENTARY WIRING DIAGRAM (CONT.)

DRAWING: **E-10** OF: **12**

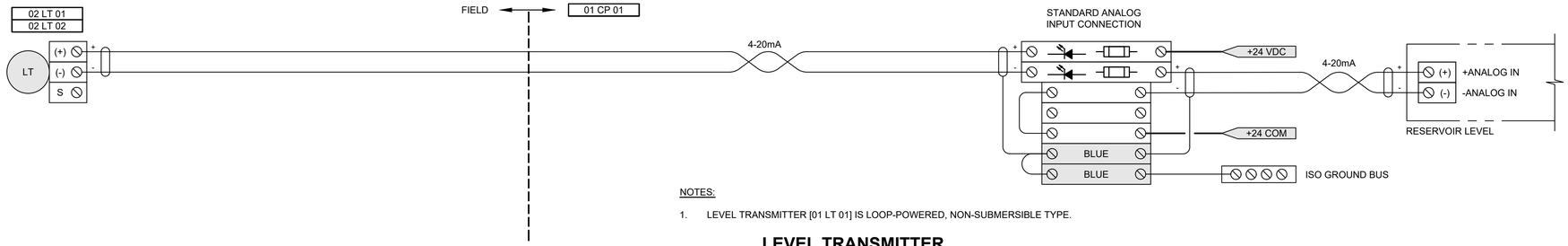

PLC	RACK	SLOT	CHAN.	DEVICE	CONFIG
03 CP 01	01	01	02	02 LT 01	4-20 mA

NOTES:

1. LEVEL TRANSMITTER [01 LT 01] IS LOOP-POWERED, NON-SUBMERSIBLE TYPE.

LEVEL TRANSMITTER INSTRUMENTATION CONNECTION DIAGRAM

1 / -

24 VDC, LOOP-POWERED

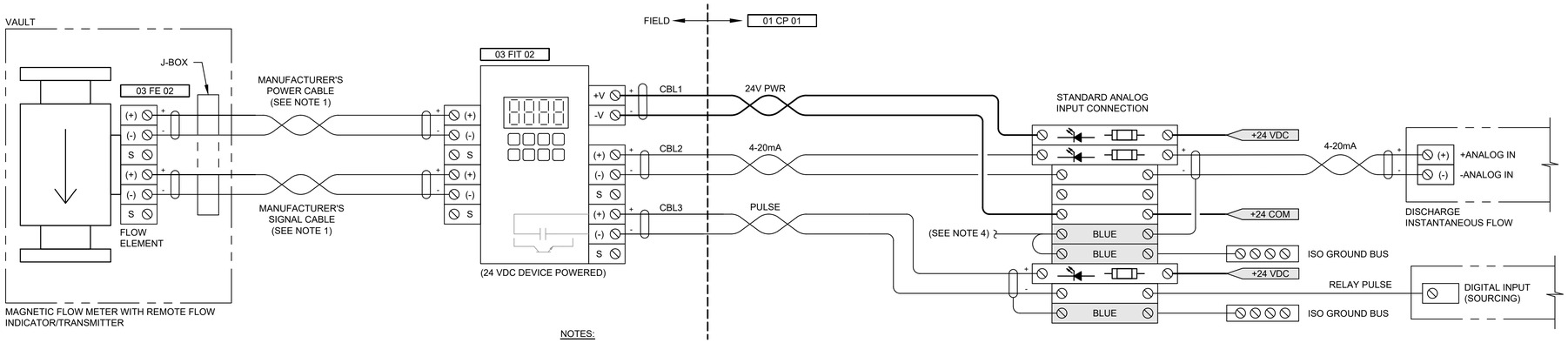

PLC	RACK	SLOT	CHAN.	DEVICE	CONFIG
03 CP 01	01	01	02	03 FIT 01	4-20 mA

PLC	RACK	SLOT	CHAN.	DEVICE	CONFIG
03 CP 01	01	07	05	03 FIT 01	24 VDC

NOTES:

1. MANUFACTURER'S RECOMMENDED CABLES FOR MAGNETIC COIL POWER AND FLOW SIGNAL SHALL BE CONNECTED WITHOUT BREAK OR SPLICE BETWEEN THE FLOW METER INDICATOR/TRANSMITTER AND THE FLOW ELEMENT IN THE METER VAULT. MAY BE COMBINED WHEN ALLOWED BY MANUFACTURER.
2. 24 VDC POWER TO THE FLOW METER SHALL BE DERIVED FROM THE METER'S STANDARD 7-TERMINAL ANALOG GROUP.
3. PROVIDE A SEPARATE FUSED 24 VDC INPUT TERMINAL PAIR JUST BELOW THE STANDARD 7-TERMINAL ANALOG GROUP FOR FLOW TOTALIZING PULSE SIGNAL.
4. FOR CLARITY, SHIELDS ARE NOT SHOWN CONNECTED ON THE FIELD SIDE OF THE STANDARD 7-TERMINAL ANALOG GROUP. CONNECT ALL SHIELDS AT THE TERMINAL SHOWN.

INSTANTANEOUS AND TOTALIZED FLOW INSTRUMENTATION CONNECTION DIAGRAM

2 / -

24 VDC, DEVICE-POWERED

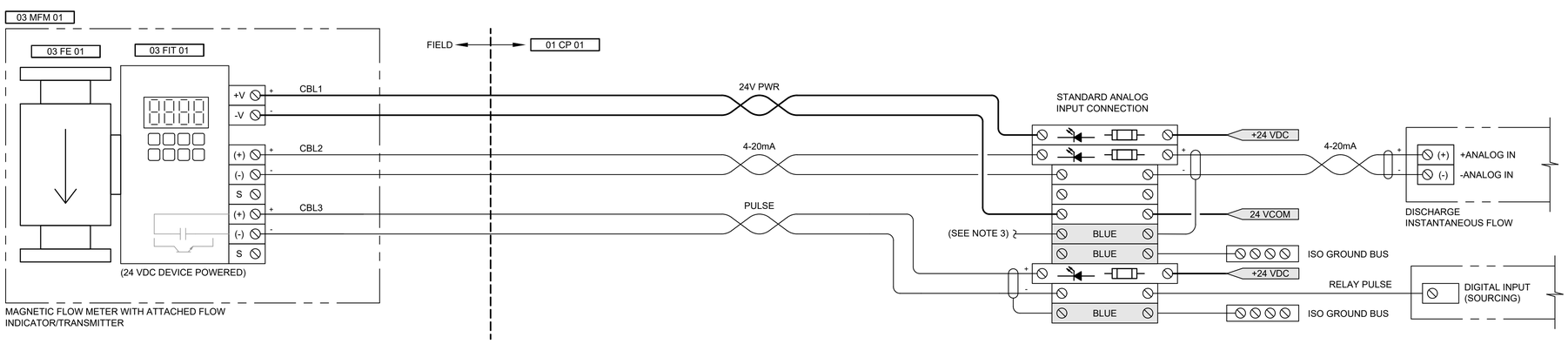

PLC	RACK	SLOT	CHAN.	DEVICE	CONFIG
03 CP 01	01	01	02	03 FIT 01	4-20 mA

PLC	RACK	SLOT	CHAN.	DEVICE	CONFIG
03 CP 01	01	07	05	03 FIT 01	24 VDC

NOTES:

1. 24 VDC POWER TO THE FLOW METER SHALL BE DERIVED FROM THE METER'S STANDARD 7-TERMINAL ANALOG GROUP.
2. PROVIDE A SEPARATE FUSED 24 VDC INPUT TERMINAL PAIR JUST BELOW THE STANDARD 7-TERMINAL ANALOG GROUP FOR FLOW TOTALIZING PULSE SIGNAL.
3. FOR CLARITY, SHIELDS ARE NOT SHOWN CONNECTED ON THE FIELD SIDE OF THE STANDARD 7-TERMINAL ANALOG GROUP. CONNECT ALL SHIELDS AT THE TERMINAL SHOWN.

TERMINAL LEGEND:

BLUE — SHADED TERMINALS ARE USED FOR SHIELD CONNECTIONS TO ISOLATED GROUND. THESE TERMINALS ARE BLUE AND ARE NOT TO BE CONNECTED TO CHASSIS GROUND.

INSTANTANEOUS AND TOTALIZED FLOW INSTRUMENTATION CONNECTION DIAGRAM

3 / -

24 VDC, DEVICE-POWERED

Gray & Osborne, Inc.
CONSULTING ENGINEERS
2102 CARRIAGE DRIVE SW,
BUILDING I
OLYMPIA, WA 98502
(360) 292-7481

DAVID ALAN CALKINS — STATE OF WASHINGTON — 43240 — REGISTERED PROFESSIONAL ENGINEER — 4/4/2025

MASON COUNTY PUD

MASON COUNTY PUD NO. 1
MANZANITA RESERVOIR AND BOOSTER PUMP STATION
1681 E McREAVY RD
UNION, WA

No.	DATE	REVISION

ISSUED FOR:	BID SET
ISSUE DATE:	APRIL 2025
APPROVED BY:	DAC
CHECKED BY:	JRN
DRAWN BY:	DCK
DESIGNER:	DAC
G & O JOB NO.:	22260.00
FILE:	E_ALD.DWG

ELECTRICAL

SCHEDULE A
ANALOG LOOP DIAGRAMS

DRAWING: **E-11** OF: **12**

SLOT 00		ANALOG INPUT CARD, 4 CHANNEL, ISOLATED, 16-BIT, 4-20 mA		
CHANNEL		TAG NUMBER	TAG DESCRIPTION	I/O FUNCTION
NO.	ADDRESS			
0	00:00	03 MFM 01	MAGNETIC FLOW METER (HIGHLAND PARK)	4 MA = 0 PSI, 20 MA = 150 PSI
1	00:01	03 FIT 02	FLOW INDICATOR/TRANSMITTER - ALDERBROOK	4 MA = 0 PSI, 20 MA = 150 PSI
2	00:02	- - - -	HOT SPARE	
3	00:03	- - - -	HOT SPARE	

SLOT 01	SPARE - ANALOG INPUT CARD, 4 CHANNEL, ISOLATED, 16-BIT, 4-20 mA

SLOT 02	SPARE - ANALOG OUTPUT CARD, 4 CHANNEL, ISOLATED, 16-BIT, 4-20 mA

SLOT 03		DIGITAL INPUT CARD, 16 CHANNEL, 24 VDC		
CHANNEL		TAG NUMBER	TAG DESCRIPTION	I/O FUNCTION
NO.	ADDRESS			
0	03:00	03 ATS 01	AUTOMATIC TRANSFER SWITCH (SUSE)	TRUE = ATS IN GENERATOR POSITION
1	03:01	03 GCP 01	GENERATOR CONTROL PANEL	TRUE = RUNNING
2	03:02	03 GCP 01	GENERATOR CONTROL PANEL	TRUE = GENERAL ALARM
3	03:03	03 GCP 01	GENERATOR CONTROL PANEL	TRUE = GENERATOR FAIL
4	03:04	03 GCP 01	GENERATOR CONTROL PANEL	TRUE = GENERATOR IN AUTO
5	03:05	03 GCP 01	GENERATOR CONTROL PANEL	TRUE = LOW BATTERY
6	03:06	03 GCP 01	GENERATOR CONTROL PANEL	TRUE = LOW OIL PRESSSURE
7	03:07	03 GCP 01	GENERATOR CONTROL PANEL	TRUE = HIGH COOLANT TEMPERATURE
8	03:08	03 GCB 01	GENERATOR CIRCUIT BREAKER	TRUE = CLOSED
9	03:09	03 SD 01	SMOKE DETECTOR, BOOSTER PUMP BUILDING	TRUE = SMOKE ALARM
10	03:10	01 CPX 01	CONTROL PANEL, ALDERBROOK WELL BUILDING	TRUE = WELL PUMP RUNNING
11	03:11	01 CPX 01	CONTROL PANEL, ALDERBROOK WELL BUILDING	TRUE = WELL PUMP FAILURE ALARM
12	03:12	- - - -	HOT SPARE	
13	03:13	- - - -	HOT SPARE	
14	03:14	- - - -	HOT SPARE	
15	03:15	- - - -	HOT SPARE	

SLOT 05		DIGITAL INPUT CARD, 16 CHANNEL, 24 VDC		
CHANNEL		TAG NUMBER	TAG DESCRIPTION	I/O FUNCTION
NO.	ADDRESS			
0	05:00	02 IS 01	INTRUSION SWITCH, ROOF HATCH, RESERVOIR 1	TRUE = RESERVOIR 1ROOF HATCH INTRUSION ALARM
1	05:01	02 IS 02	INTRUSION SWITCH, LADDER GUARD, RESERVOIR 1	TRUE = RESERVOIR 1 LADDER GUARD INTRUSION ALARM
2	05:02	02 IS 03	INTRUSION SWITCH, ROOF HATCH, RESERVOIR 2	TRUE = RESERVOIR 2 ROOF HATCH INTRUSION ALARM
3	05:03	02 IS 04	INTRUSION SWITCH, LADDER GUARD, RESERVOIR 2	TRUE = RESERVOIR 2 LADDER GUARD INTRUSION ALARM
4	05:04	02 LS 01	LEVEL SWTICH, HIGH LEVEL, RESERVOIR 1	TRUE = RESERVOIR 2 HIGH LEVEL ALARM
5	05:05	02 LS 02	LEVEL SWITCH, OFF, RESERVOIR 1	TRUE = RESERVOIR 1 OFF
6	05:06	02 LS 03	LEVEL SITCH, ON, RESERVOIR 1	TRUE = RESERVOIR 1 ON
7	05:07	02 LS 04	LEVEL SWITCH, LOW LEVEL ALARM, RESERVOIR 1	TRUE = RESERVOIR 2 LOW LEVEL ALARM
8	05:08	02 LS 05	LEVEL SWTICH, HIGH LEVEL, RESERVOIR 2	TRUE = RESERVOIR 2 HIGH LEVEL ALARM
9	05:09	02 LS 06	LEVEL SWITCH, OFF, RESERVOIR 2	TRUE = RESERVOIR 2 OFF
10	05:10	02 LS 07	LEVEL SITCH, ON, RESERVOIR 2	TRUE = RESERVOIR 2 ON
11	05:11	02 LS 08	LEVEL SWITCH, LOW LEVEL ALARM, RESERVOIR 2	TRUE = RESERVOIR 2 LOW LEVEL ALARM
12	05:12	- - - -	HOT SPARE	
13	05:13	- - - -	HOT SPARE	
14	05:14	- - - -	HOT SPARE	
15	05:15	- - - -	HOT SPARE	

SLOT 06		DIGITAL INPUT CARD, 16 CHANNEL, 24 VDC		
CHANNEL		TAG NUMBER	TAG DESCRIPTION	I/O FUNCTION
NO.	ADDRESS			
0	06:00	03 BP 01	BOOSTER PUMP NO. 1 (HIGHLAND PARK)	TRUE = PUMP START
1	06:01	03 BP 01	BOOSTER PUMP NO. 1 (HIGHLAND PARK)	TRUE = PUMP STOP
2	06:02	03 BP 02	BOOSTER PUMP NO. 2 (HIGHLAND PARK)	TRUE = PUMP START
3	06:03	03 BP 02	BOOSTER PUMP NO. 2 (HIGHLAND PARK)	TRUE = PUMP STOP
4	06:04	02 LS 01	LEVEL SWTICH, HIGH LEVEL, RESERVOIR 1	TRUE = RESERVOIR 1 HIGH LEVEL ALARM
5	06:05	02 LS 04	LEVEL SWITCH, LOW LEVEL ALARM, RESERVOIR 1	TRUE = RESERVOIR 1 LOW LEVEL ALARM
6	06:06	02 LS 05	LEVEL SWTICH, HIGH LEVEL, RESERVOIR 2	TRUE = RESERVOIR 2 HIGH LEVEL ALARM
7	06:07	02 LS 08	LEVEL SWITCH, LOW LEVEL ALARM, RESERVOIR 2	TRUE = RESERVOIR 2 LOW LEVEL ALARM
8	06:08	- - - -	HOT SPARE	
9	06:09	- - - -	HOT SPARE	
10	06:10	- - - -	HOT SPARE	
11	06:11	- - - -	HOT SPARE	
12	06:12	- - - -	HOT SPARE	
13	06:13	- - - -	HOT SPARE	
14	06:14	- - - -	HOT SPARE	
15	06:15	- - - -	HOT SPARE	

SLOT 07		DIGITAL OUTPUT CARD, 16 CHANNEL, 24 VDC		
CHANNEL		TAG NUMBER	TAG DESCRIPTION	I/O FUNCTION
NO.	ADDRESS			
0	07:00	02 IS 01	INTRUSION SWITCH, ROOF HATCH, RESERVOIR 1	TRUE = RESERVOIR 1 INTRUSION ALARM
1	07:01	02 LS 01	LEVEL SWTICH, HIGH LEVEL, RESERVOIR 1	TRUE = RESERVOIR 1 HIGH-LEVEL ALARM
2	07:02	02 LS 04	LEVEL SWITCH, LOW LEVEL ALARM, RESERVOIR 1	TRUE = RESERVOIR 1 LOW-LEVEL ALARM
3	07:03	02 IS 03	INTRUSION SWITCH, ROOF HATCH, RESERVOIR 2	TRUE = RESERVOIR 2 INTRUSION ALARM
4	07:04	02 LS 05	LEVEL SWTICH, HIGH LEVEL, RESERVOIR 2	TRUE = RESERVOIR 2 HIGH-LEVEL ALARM
5	07:05	02 LS 08	LEVEL SWITCH, LOW LEVEL ALARM, RESERVOIR 2	TRUE = RESERVOIR 2 LOW-LEVEL ALARM
6	07:06	03 SMBS 01	SKID-MOUNTED BOOSTER PUMP STATION (HIGHLAND PARK)	TRUE = HIGHLAND PARK SKID PUMP FAILURE ALARM
7	07:07	03 SMBS 01	SKID-MOUNTED BOOSTER PUMP STATION (HIGHLAND PARK)	TRUE = HIGHLAND PARK SKID POWER FAILURE ALARM
8	07:08	03 SMBS 01	SKID-MOUNTED BOOSTER PUMP STATION (HIGHLAND PARK)	TRUE = HIGHLAND PARK SKID LOW PRESSURE SUCTION ALARM
9	07:09	03 GCP 01	GENERATOR CONTROL PANEL	TRUE = GENERATOR MAJOR FAILURE ALARM
10	07:10	03 GCP 01	GENERATOR CONTROL PANEL	TRUE = GENERATOR MINOR FAILURE ALARM
11	07:11	03 SD 01	SMOKE DETECTOR, BOOSTER PUMP BUILDING	TRUE = SMOKE ALARM
12	07:12	01 CPX 01	CONTROL PANEL, ALDERBROOK WELL BUILDING	TRUE = HIGHLAND PARK WELL PUMP FAILURE ALARM
13	07:13	- - - -	HOT SPARE	
14	07:14	- - - -	HOT SPARE	
15	07:15	- - - -	HOT SPARE	

SLOT 08	SPARE - DIGITAL OUTPUT CARD, 16 CHANNEL, 24 VDC

Gray & Osborne, Inc.
CONSULTING ENGINEERS
2102 CARRIAGE DRIVE SW,
BUILDING I
OLYMPIA, WA 98502
(360) 292-7481

DAVID ALAN CALKINS
STATE OF WASHINGTON
43249
REGISTERED
PROFESSIONAL ENGINEER
4/4/2025

MASON COUNTY PUD

MASON COUNTY PUD NO. 1
MANZANITA RESERVOIR AND BOOSTER PUMP STATION
1681 E McREAVY RD
UNION, WA

No.	DATE	REVISION

ISSUED FOR:	BID SET
ISSUE DATE:	APRIL 2025
APPROVED BY:	DAC
CHECKED BY:	JRN
DRAWN BY:	DCK
DESIGNER:	DAC
G & O JOB NO.:	22260.00
FILE:	E_PLCIO.DWG

ELECTRICAL

SCHEDULE A
PLC I/O TABLES

DRAWING: **E-12** OF: **12**

AREA 03 POWER CABLE AND CONDUIT SCHEDULE

NUMBER	SOURCE	DESTINATION	SIZE	CONDUCTORS	E-1	NOTES
P0301~	[03 SUB 01], ELECTRICAL SUBSTATION	[03 UT 01], UTILITY TRANSFORMER	3"	PULL WIRE		SPARE CONDUIT.
P0302	[03 UT 01], UTILITY TRANSFORMER	[03 MB 01], METER BASE	2-1/2"	3X #4/0 AWG XHHW-2; 1X #4 AWG XHHW-2 N		
P0303	[03 MB 01], METER BASE	[03 SDCB 01], SYSTEM DISCONNECT CIRCUIT BREAKER, AUTOMATIC TRANSFER SWITCH (SUSE)	2-1/2"	3X #4/0 AWG XHHW-2; 1X #4/0 AWG XHHW-2 N; 1X #4 AWG XHHW-2 G		
P0304	[03 GCB 01], GENERATOR CIRCUIT BREAKER	[03 ATS 01], AUTOMATIC TRANSFER SWITCH (SUSE)	2-1/2"	3X #4/0 AWG XHHW-2; 1X #4/0 AWG XHHW-2 N; 1X #4 AWG XHHW-2 G		
P0305	[03 ATS 01], AUTOMATIC TRANSFER SWITCH (SUSE)	[03 PB 01], PANELBOARD	2-1/2"	3X #4/0 AWG XHHW-2; 1X #4/0 AWG XHHW-2 N; 1X #4 AWG XHHW-2 G		
P0306	[03 PB 01], PANELBOARD	[03 SMBS 01], SKID-MOUNTED BOOSTER PUMP STATION (HIGHLAND PARK)	1"	3X #6 AWG XHHW-2; 1X #6 AWG XHHW-2 N; 1X #6 AWG XHHW-2 G	* 1	
P0307~	[03 PB 01], PANELBOARD	J-BOX JP0308 ON CEILING NEAR FUTURE SKID MOUNTED BOOSTER STATION	2-1/2"	PULL WIRE	* 1	SPARE CONDUIT.
P0308	[03 PB 01], PANELBOARD	[03 XFMR 01], TRANSFORMER	1-1/2"	3X #8 AWG XHHW-2; 1X #8 AWG XHHW-2 N; 1X #8 AWG XHHW-2 G		
P0309	[03 XFMR 01], TRANSFORMER	[03 PB 02], PANELBOARD	1-1/2"	3X #4 AWG XHHW-2; 1X #4 AWG XHHW-2 N; 1X #8 AWG XHHW-2 G		
P0310	[03 PB 02], PANELBOARD	[03 GADP 01], GENERATOR AUXILIARY DEVICE PANEL	3/4"	1X #10 AWG XHHW-2; 1X #10 AWG XHHW-2 N; 1X #10 AWG XHHW-2 G		
P0311	[03 PB 02], PANELBOARD	[03 CP 02], CONTROL PANEL, PLC, BOOSTER PUMP BUILDING	3/4"	1X #12 AWG XHHW-2; 1X #12 AWG XHHW-2 N; 1X #12 AWG XHHW-2 G		
P0312	[03 PB 02], PANELBOARD	[03 CP 02], CONTROL PANEL, PLC, BOOSTER PUMP BUILDING	3/4"	1X #12 AWG XHHW-2; 1X #12 AWG XHHW-2 N; 1X #12 AWG XHHW-2 G		
P0313	[03 PB 02], PANELBOARD	[03 T 01], THERMOSTAT, BOOSTER PUMP BUILDING	3/4"	1X #12 AWG XHHW-2; 1X #12 AWG XHHW-2 N; 1X #12 AWG XHHW-2 G		
P0313A	[03 T 01], THERMOSTAT, BOOSTER PUMP BUILDING	[03 EF 01], EXHAUST FAN, BOOSTER PUMP BUILDING	3/4"	1X #12 AWG XHHW-2; 1X #12 AWG XHHW-2 N; 1X #12 AWG XHHW-2 G		
P0314	[03 PB 02], PANELBOARD	[03 AD 01], AUTODIALER	3/4"	1X #12 AWG XHHW-2; 1X #12 AWG XHHW-2 N; 1X #12 AWG XHHW-2 G		
P0315	[03 PB 02], PANELBOARD	[03 HT 01], HEATER, BOOSTER PUMP BUILDING	3/4"	2X #12 AWG XHHW-2; 1X #12 AWG XHHW-2 N; 1X #12 AWG XHHW-2 G		
P0316~	[03 PB 01], PANELBOARD	STUB OUT 3 FT. FROM EXTERIOR WALL, CAP BELOW GRADE	2"	PULL WIRE		SPARE CONDUIT.
P0317~	[03 PB 02], PANELBOARD	STUB OUT 3 FT. FROM EXTERIOR WALL, CAP BELOW GRADE	2"	PULL WIRE		SPARE CONDUIT.

AREA 01 CONTROL CABLE AND CONDUIT SCHEDULE

NUMBER	SOURCE	DESTINATION	SIZE	CONDUCTORS	E-1	NOTES
C0100	[01 CPX 01], CONTROL PANEL, ALDERBROOK WELL BUILDING	[01 HH 01], HANDHOLE	1"	12X #10 AWG XHHW-2		WELL PUMP RUNNING, OVER TEMP, SEAL LEAK, FAILED, RUN COMMAND + 2 SPARES + PULL WIRE
C0101	[01 HH 01], HANDHOLE	[03 CP 02], CONTROL PANEL, PLC, BOOSTER PUMP BUILDING	1"	12X #10 AWG XHHW-2		WELL PUMP RUNNING, FAILED, RUN COMMAND + 6 SPARES + PULL WIRE

AREA 02 CONTROL CABLE AND CONDUIT SCHEDULE

NUMBER	SOURCE	DESTINATION	SIZE	CONDUCTORS	E-1	NOTES
C0201	[03 CP 02], CONTROL PANEL, PLC, BOOSTER PUMP BUILDING	J-BOX JC0201A AT BASE OF LADDER, RESRVOIR 1	1-1/2"	14X #10 AWG XHHW-2		RESERVOIR 1 INTRUSION SWITCHES AND LEVEL SENSORS
C0201A	J-BOX JC0201 AT BASE OF LADDER, RESRVOIR 1	[02 IS 02], INTRUSION SWITCH, LADDER GUARD, RESERVOIR 1	3/4"	2X #14 AWG XHHW-2		[02 IS 03] + 1 SPARE
C0201B	J-BOX JC0201A AT BASE OF LADDER, RESRVOIR 1	J-BOX JC0201B AT TOP OF LADDER, RESRVOIR 1	1"	12X #10 AWG XHHW-2		ROOF INTRUSION SWITCHES (2), LEVEL SENSORS (4), AND SPARES. DEAD-END SPARES.
C0201C	J-BOX JC0201B AT TOP OF LADDER, RESRVOIR 1	[02 IS 01], INTRUSION SWITCH, ROOF HATCH, RESERVOIR 1	3/4"	2X #14 AWG XHHW-2		[02 IS 02] + 1 SPARE
C0201D	J-BOX JC0201B AT TOP OF LADDER, RESRVOIR 1	J-BOX JC0201E ABOVE ROOF HATCH, RESRVOIR 1	3/4"	8X #14 AWG XHHW-2		[02 LS 01], [02 LS 02], 02 LS 03], AND 02 LS 04]
C0202	[03 CP 02], CONTROL PANEL, PLC, BOOSTER PUMP BUILDING	J-BOX JC0202A AT BASE OF LADDER, RESRVOIR 2	1-1/2"	14X #10 AWG XHHW-2		RESERVOIR 1 INTRUSION SWITCHES AND LEVEL SENSORS
C0202A	J-BOX JC0202 AT BASE OF LADDER, RESRVOIR 2	[02 IS 04], INTRUSION SWITCH, LADDER GUARD, RESERVOIR 2	3/4"	2X #14 AWG XHHW-2		[02 IS 03] + 1 SPARE
C0202B	J-BOX JC0202 AT BASE OF LADDER, RESRVOIR 2	J-BOX JC0202B AT TOP OF LADDER, RESRVOIR 2	1"	12X #10 AWG XHHW-2		ROOF INTRUSION SWITCHES (2), LEVEL SENSORS (4), AND SPARES. DEAD-END SPARES.
C0202C	J-BOX JC0202B AT TOP OF LADDER, RESRVOIR 2	[02 IS 03], INTRUSION SWITCH, ROOF HATCH, RESERVOIR 2	3/4"	2X #14 AWG XHHW-2		[02 IS 02] + 1 SPARE
C0202D	J-BOX JC0202B AT TOP OF LADDER, RESRVOIR 2	J-BOX JC0202E ABOVE ROOF HATCH, RESRVOIR 2	3/4"	8X #14 AWG XHHW-2		[02 LS 01], [02 LS 02], 02 LS 03], AND 02 LS 04]

AREA 03 CONTROL CABLE AND CONDUIT SCHEDULE

NUMBER	SOURCE	DESTINATION	SIZE	CONDUCTORS	E-1	NOTES
C0301	[03 GCP 01], GENERATOR CONTROL PANEL	[03 ATS 01], AUTOMATIC TRANSFER SWITCH (SUSE)	3/4"	12X #14 AWG XHHW-2		GENERATOR STATUS TO PLC; GENERATOR RUN FROM ATS
C0302	[03 ATS 01], AUTOMATIC TRANSFER SWITCH (SUSE)	[03 CP 02], CONTROL PANEL, PLC, BOOSTER PUMP BUILDING	1"	18X #14 AWG XHHW-2		GENERATOR STATUS (8); ATS STATUS (2); SDCB STATUS (2); SPD STATUS (2);; + SPARES
C0303	[03 CP 02], CONTROL PANEL, PLC, BOOSTER PUMP BUILDING	[03 CP 01], CONTROL PANEL, PLC, SKID-MOUNTED BOOSTER PUMP STATION (HIGHLAND PARK)	1"	14X #14 AWG XHHW-2		RESERVOIR 1 AND 2 FLOATS: HIGH LEVEL, PUMP ON, PUMP OFF, LOW LEVEL + 6 SPARES
C0304	[03 CP 02], CONTROL PANEL, PLC, BOOSTER PUMP BUILDING	[03 AD 01], AUTODIALER	1-1/2"	16X #14 AWG XHHW-2		ALARMS FROM SKIDS, RESERVOIRS, WELL PUMP, AND BOOSTER BUILDING
C0305~	[03 CP 02], CONTROL PANEL, PLC, BOOSTER PUMP BUILDING	STUB-UP ON FLOOR AND CAP NEAR FUTURE LOCATION OF SKID	1-1/2"	PULL WIRE		SPARE CONDUIT. PUMP START/STOP (2); RES 1 HIGH WATER LEVEL, RES 1 LOW WATER LEVEL (2); RES 2 HIGH WATER LEVEL, RES 2 LOW WATER LEVEL (2) + 8 SPARES
C0306	[03 CP 02], CONTROL PANEL, PLC, BOOSTER PUMP BUILDING	[03 SD 01], SMOKE DETECTOR, BOOSTER PUMP BUILDING	3/4"	1X #12 AWG XHHW-2; 1X #12 AWG XHHW-2 N; 1X #12 AWG XHHW-2 G; 2X #14 AWG XHHW-2		
C0307~	[03 CP 02], CONTROL PANEL, PLC, BOOSTER PUMP BUILDING	STUB OUT 3 FT. FROM EXTERIOR WALL, CAP BELOW GRADE	2"	PULL WIRE		SPARE CONDUIT.

AREA 02 INSTRUMENTATION CABLE AND CONDUIT SCHEDULE

NUMBER	SOURCE	DESTINATION	SIZE	CONDUCTORS	E-1	NOTES
S0201	[03 CP 02], CONTROL PANEL, PLC, BOOSTER PUMP BUILDING	J-BOX JC0201A AT BASE OF RESERVOIR	3/4"	1X 2-C, 1-TP, #18 AWG, OS	* 3	
S0201A	J-BOX JC0201A AT BASE OF RESERVOIR	J-BOX JC0201B AT TOP OF RESERVOIR	3/4"	1X 2-C, 1-TP, #18 AWG, OS	* 3	
S0201B	J-BOX JC0201B AT TOP OF RESERVOIR	[02 LT 01], LEVEL TRANSDUCER, RESERVOIR 1	3/4"	1X 2-C, 1-TP, #18 AWG, OS	* 3	
S0202	[03 CP 02], CONTROL PANEL, PLC, BOOSTER PUMP BUILDING	J-BOX JC0201A AT BASE OF RESERVOIR	3/4"	1X 2-C, 1-TP, #18 AWG, OS	* 3	
S0202A	J-BOX JC0201A AT BASE OF RESERVOIR	J-BOX JC0201B AT TOP OF RESERVOIR	3/4"	1X 2-C, 1-TP, #18 AWG, OS	* 3	
S0202B	J-BOX JC0201B AT TOP OF RESERVOIR	[02 LT 02], LEVEL TRANSDUCER, RESERVOIR 2	3/4"	1X 2-C, 1-TP, #18 AWG, OS	* 3	

AREA 03 INSTRUMENTATION CABLE AND CONDUIT SCHEDULE

NUMBER	SOURCE	DESTINATION	SIZE	CONDUCTORS	E-1	NOTES
S0301	[03 CP 02], CONTROL PANEL, PLC, BOOSTER PUMP BUILDING	[03 MFM 01], MAGNETIC FLOW METER (HIGHLAND PARK)	3/4"	1X 6-C, 2-TT, #18 AWG, IS/OS	* 3	PRESSURE TRANSDUCERS (SUCTION, DISCHARGE);
S0302~	[03 CP 02], CONTROL PANEL, PLC, BOOSTER PUMP BUILDING	[03 CP 01], CONTROL PANEL, PLC, SKID-MOUNTED BOOSTER PUMP STATION (HIGHLAND PARK)	1"	PULL WIRE	* 3	SPARE CONDUIT. PROVISIONS FOR 4 ANALOG I/O
S0303~	[03 CP 02], CONTROL PANEL, PLC, BOOSTER PUMP BUILDING	STUB-UP ON FLOOR AND CAP NEAR FUTURE LOCATION OF SKID	1-1/2"	PULL WIRE	* 3	SPARE CONDUIT. FLOW METER
S0304	[03 CP 02], CONTROL PANEL, PLC, BOOSTER PUMP BUILDING	[03 FIT 02], FLOW INDICATOR/TRANSMITTER - ALDERBROOK	3/4"	1X 6-C, 2-TT, #18 AWG, IS/OS	* 3	
S0304A	[03 FIT 02], FLOW INDICATOR/TRANSMITTER - ALDERBROOK	[03 FE 02], FLOW ELEMENT - ALDERBROOK	3/4"	MANUFACTURER'S RECOMMENDED CABLE	* 3	COIL POWER.
S0304B	[03 FIT 02], FLOW INDICATOR/TRANSMITTER - ALDERBROOK	[03 FE 02], FLOW ELEMENT - ALDERBROOK	3/4"	MANUFACTURER'S RECOMMENDED CABLE	* 3	COIL SIGNAL.

Gray & Osborne, Inc.
CONSULTING ENGINEERS
2102 CARRIAGE DRIVE SW, BUILDING I
OLYMPIA, WA 98502
(360) 292-7481

DAVID ALAN CALKINS
STATE OF WASHINGTON
43249
REGISTERED PROFESSIONAL ENGINEER
4/4/2025

MASON COUNTY PUD

MASON COUNTY PUD NO. 1
MANZANITA RESERVOIR AND BOOSTER PUMP STATION
1681 E McREAVY RD
UNION, WA

No.	DATE	REVISION

ISSUED FOR:	BID SET
ISSUE DATE:	APRIL 2025
APPROVED BY:	DAC
CHECKED BY:	JRN
DRAWN BY:	DCK
DESIGNER:	DAC
G & O JOB NO.:	22260.00
FILE:	E_CCS.DWG

ELECTRICAL

SCHEDULE A CABLE AND CONDUIT SCHEDULE

DRAWING: **EC-1** OF: **1**

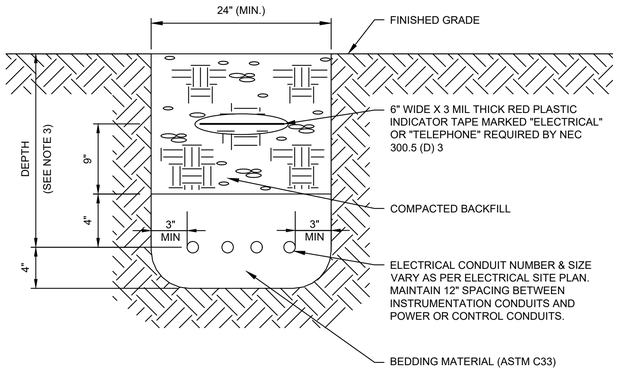

NOTE:

1. SPACING BETWEEN CONDUITS AND OTHER UTILITIES SHALL BE IN COMPLIANCE WITH THE UTILITIES OR 24 INCHES MINIMUM, WHICHEVER IS THE GREATER.
2. SEE CIVIL SHEETS FOR SURFACING RESTORATION.
3. DEPTH IS 36 INCHES (MIN) FOR PUD UTILITY CONDUITS; 24 INCHES FOR ALL OTHER ELECTRICAL CONDUITS.

1 / TYP **ELECTRICAL TRENCHING DETAIL**
NOT TO SCALE

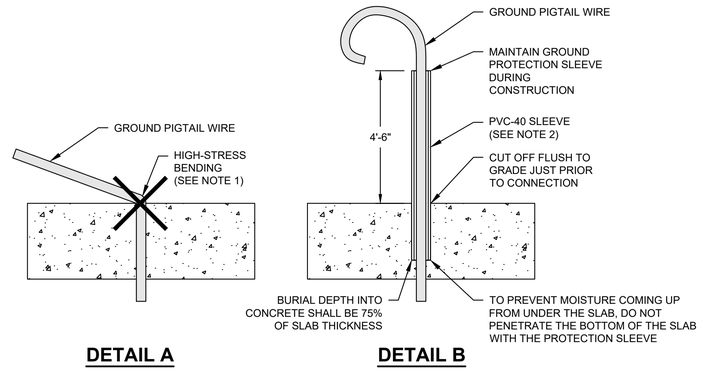

NOTES:

1. BARE COPPER GROUND WIRES SHALL NOT PENETRATE DIRECTLY OUT OF CONCRETE FLOORS. CONSTRUCTION ACTIVITIES CAN CAUSE TIGHT WIRE BENDING AND POSSIBLE GROUND WIRE DEGRADATION. DETAIL "A" IS NOT ACCEPTABLE.
2. PROTECT THE GROUND PIGTAIL DURING CONSTRUCTION WITH A PVC-40 SLEEVE INSTALLED AS DESCRIBED IN DETAIL "B".
3. JUST PRIOR TO SETTING EQUIPMENT OVER, OR MAKING THE FINAL CONNECTION OF THE GROUND WIRE, CUT OFF THE SLEEVE FLUSH TO THE FLOOR TAKING CARE NOT TO CUT INTO THE GROUND WIRE.

2 / TYP **GROUND PIGTAIL CONSTRUCTION PROTECTION SLEEVE DETAIL**
NOT TO SCALE

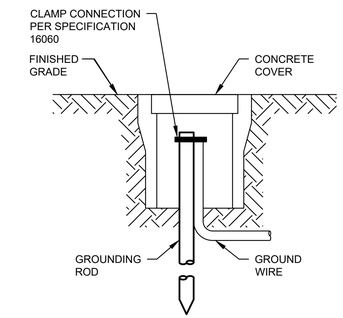

NOTES:

1. GROUND ROD BOX SHALL BE FOGTITE GROUND ROD BOX WITH ROAD RATING EQUAL TO THE DEVICE OR STRUCTURE IT SUPPORTS (H20 MINIMUM).

3 / TYP **GROUND ROD BOX DETAIL**
NOT TO SCALE

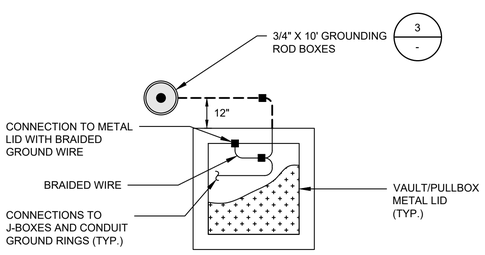

NOTES:

1. PROVIDE AND SIZE GROUND CONDUCTOR FROM SYSTEM GROUND DISTRIBUTION PER 1 / E-5.
2. GROUND ALL METAL COMPONENTS AS PER "VAULT AND PULLBOX GROUNDING" IN SPECIFICATION 16060.
3. ALL GROUND CONDUCTORS SHALL BE STRANDED WITH THE EXCEPTION OF THE FLEXIBLE BRAIDED GROUND CONDUCTOR TO THE METAL HATCH LIDS.

4 / TYP **VAULT AND PULL BOX EXTERIOR GROUNDING DETAIL**
NOT TO SCALE

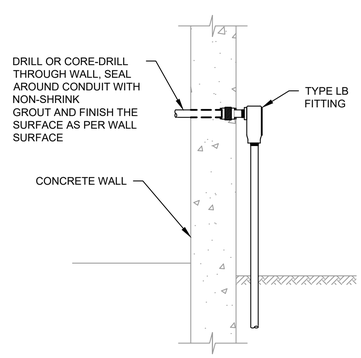

5 / TYP **INDOOR TO UNDERGROUND TRANSITION**
NOT TO SCALE

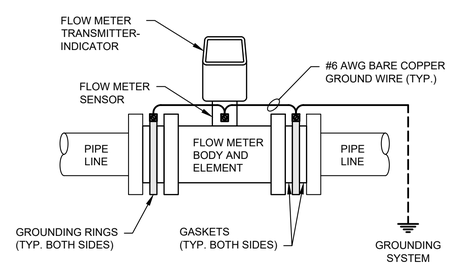

NOTES:

1. CONTRACTOR SHALL PROVIDE AND INSTALL INSULATING GASKETS AND MANUFACTURER'S GROUND RINGS TO EACH SIDE OF THE FLOW METER BODY. THE GROUND RINGS AND FLOW METER SENSOR SHALL BE TIED TO THE SYSTEM GROUND WITH A #6 AWG GROUNDING WIRE. CONNECT AS SHOWN OR PER MANUFACTURER'S REQUIREMENTS.

6 / TYP **FLOW METER GROUNDING DETAIL**
NOT TO SCALE

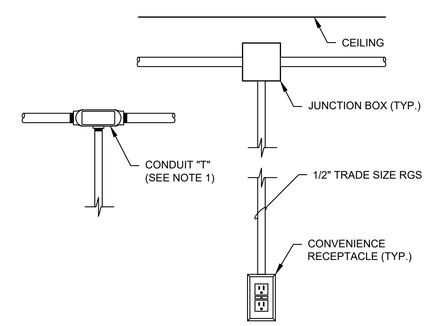

NOTES:

1. WHERE SPLICING FOR CONVENIENCE RECEPTACLE IS PERFORMED IN A CONDUIT BODY THE CONDUIT BODY SHALL BE SIZED PER THE NEC AND HAVE ITS VOLUME MARKED BY THE MANUFACTURER COMPLIANT TO NEC 314.16(C).

7 / TYP **JUNCTION BOX AND RECEPTACLE DETAIL**
NOT TO SCALE

Gray & Osborne, Inc.
CONSULTING ENGINEERS
2102 CARRIAGE DRIVE SW,
BUILDING I
OLYMPIA, WA 98502
(360) 292-7481

DAVID ALAN CALKINS
STATE OF WASHINGTON
43249
REGISTERED
PROFESSIONAL ENGINEER
4/4/2025

MASON COUNTY PUD

MASON COUNTY PUD NO. 1
MANZANITA RESERVOIR AND BOOSTER PUMP STATION
1681 E McREAVY RD
UNION, WA

No.	DATE	REVISION

ISSUED FOR:	BID SET
ISSUE DATE:	APRIL 2025
APPROVED BY:	DAC
CHECKED BY:	JRN
DRAWN BY:	DCK
DESIGNER:	DAC
G & O JOB NO.:	22260.00
FILE:	E_DET.DWG

ELECTRICAL DETAILS

SCHEDULE A ELECTRICAL DETAILS

DRAWING: **ED-1** OF: **2**

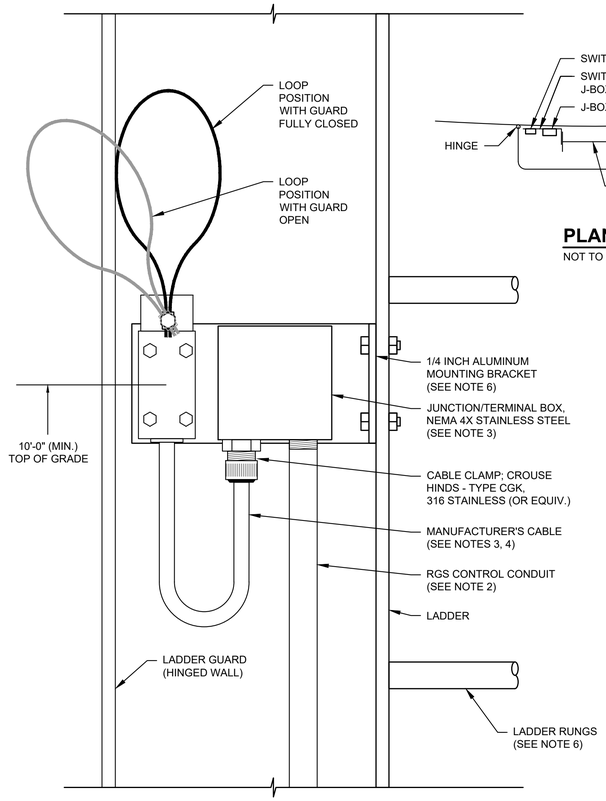

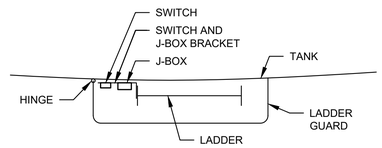

PLAN VIEW

NOT TO SCALE

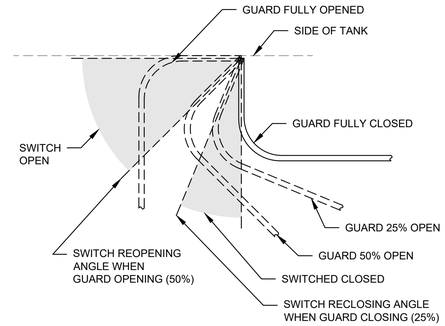

TRIPPING ANGLES

NOT TO SCALE

NOTES:

1. THE INTRUSION SWITCH SHALL BE ALLEN BRADLEY #802M, LEVER TYPE, SPRING RETURN, NEMA 4, 2 CIRCUIT, FACTORY SEALED, OR EQUAL. PROVIDE WITH AN ALLEN BRADLEY NYLATRON LOOPED ROD 6-INCHES LONG, 2-INCHES WIDE, ALLEN BRADLEY #802T-W14 OR EQUAL.
2. PROVIDE A 3/4-INCH RGS CONDUIT MOUNTED TO THE LADDER SUPPORTS INSIDE, AND ON THE HINGED SIDE, OF THE LADDER GUARD. SET THE HEIGHT OF THE INTRUSION SWITCH A MINIMUM OF 10'-0" ABOVE GRADE.
3. CONNECT THE INTRUSION SWITCH MANUFACTURER'S CABLE TO #14 AWG CONTROL CONDUCTORS IN THE JUNCTION BOX USING DIN-RAIL TERMINAL STRIPS (DO NOT SPLICE). BOTH THE CONDUIT AND MANUFACTURE'S CABLE SHALL ENTER THE J-BOX FROM THE BOTTOM. MAKE ALL CONNECTIONS WATERTIGHT.
4. MOUNT THE INTRUSION SWITCH WITH A MAXIMUM OF 12-INCHES OF EXPOSED MANUFACTURER'S CABLE.
5. CONTRACTOR SHALL MOUNT LIMIT SWITCH AND ADJUST ITS TRIPPING ANGLES SUCH THAT THE LIMIT SWITCH CONTACTS ARE OPEN WHEN THE LADDER GUARD IS HALF TO FULLY OPENED AND CLOSED WHEN THE LADDER GUARD IS ONE QUARTER OPEN TO FULLY CLOSED.
6. LADDER, RUNGS, BRACKETS AND ALL OTHER DEVICES SHOWN IN THIS DETAIL ARE PROVIDED TO SHOW THE INTENT OF THE INSTALLATION. ACTUAL DIMENSIONS AND DETAILS ARE LEFT TO THE CONTRACTOR.

1 TYP **LADDER GUARD INTRUSION SWITCH DETAIL**

NOT TO SCALE

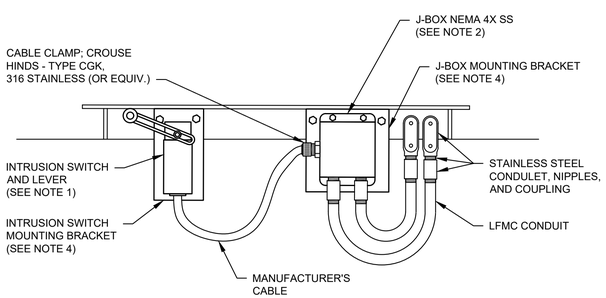

NOTES:

1. THE INTRUSION SWITCH SHALL BE ALLEN BRADLEY #802M, LEVER TYPE, SPRING RETURN, NEMA 4, 2 CIRCUIT, FACTORY SEALED. PROVIDE WITH A 1-INCH WIDE ADJUSTABLE LEVER, 1.19 TO 3-INCH RADIUS WITH 3/4-INCH NYLON ROLLER, ALLEN BRADLEY #802T-W2D.
2. CONNECT THE SWITCH TO BE CLOSED WHEN THE DOOR IS CLOSED, OPEN WHEN THE DOOR IS OPEN.
3. ALL CONDUIT FITTINGS ASSOCIATED WITH THE ROOF HATCH SHALL BE 316 STAINLESS STEEL.
4. BRACKETS FOR INTRUSION SWITCH AND J-BOX SHALL BE STAINLESS STEEL 316 BOLTED TO THE HATCH.

2 TYP **TOP HATCH INTRUSION SWITCH DETAIL**

NOT TO SCALE

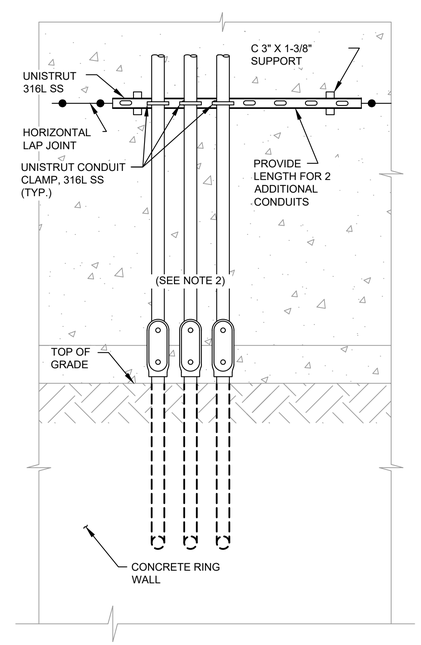

ELEVATION

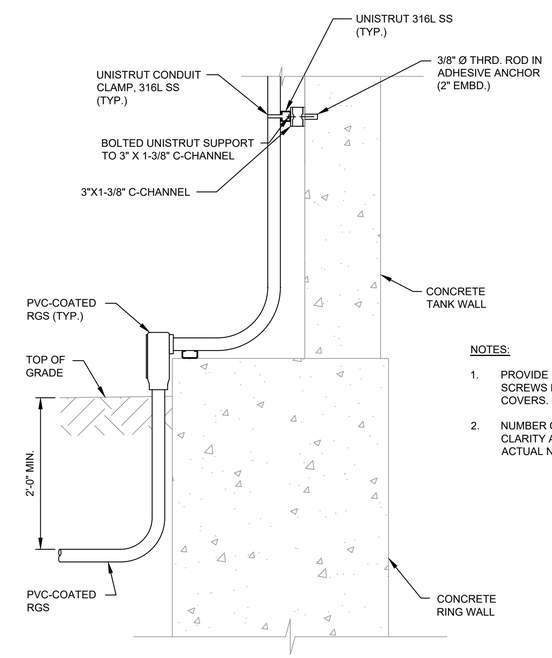

SECTION

NOTES:

1. PROVIDE 1-WAY (NON-REVERSING) SCREWS IN CONDUIT EXPOSED FITTING COVERS.
2. NUMBER OF CONDUITS SHOWN IS FOR CLARITY AND NOT REFLECTIVE OF THE ACTUAL NUMBER.

3 TYP **CONCRETE RESERVOIR CONDUIT MOUNTING DETAIL**

SCALE: 1"=1'-0"

Gray & Osborne, Inc.
CONSULTING ENGINEERS
2102 CARRIAGE DRIVE SW, BUILDING I
OLYMPIA, WA 98502
(360) 292-7481

DAVID ALAN CALKINS — STATE OF WASHINGTON — 43240 — REGISTERED PROFESSIONAL ENGINEER — 4/4/2025

MASON COUNTY PUD NO. 1
MANZANITA RESERVOIR AND BOOSTER PUMP STATION
1681 E McREAVY RD
UNION, WA

No.	DATE	REVISION

ISSUED FOR:	BID SET
ISSUE DATE:	APRIL 2025
APPROVED BY:	DAC
CHECKED BY:	JRN
DRAWN BY:	DCK
DESIGNER:	DAC
G & O JOB NO.:	22260.00
FILE:	E_DET.DWG

ELECTRICAL DETAILS

SCHEDULE A ELECTRICAL DETAILS

DRAWING: **ED-2** OF: **2**

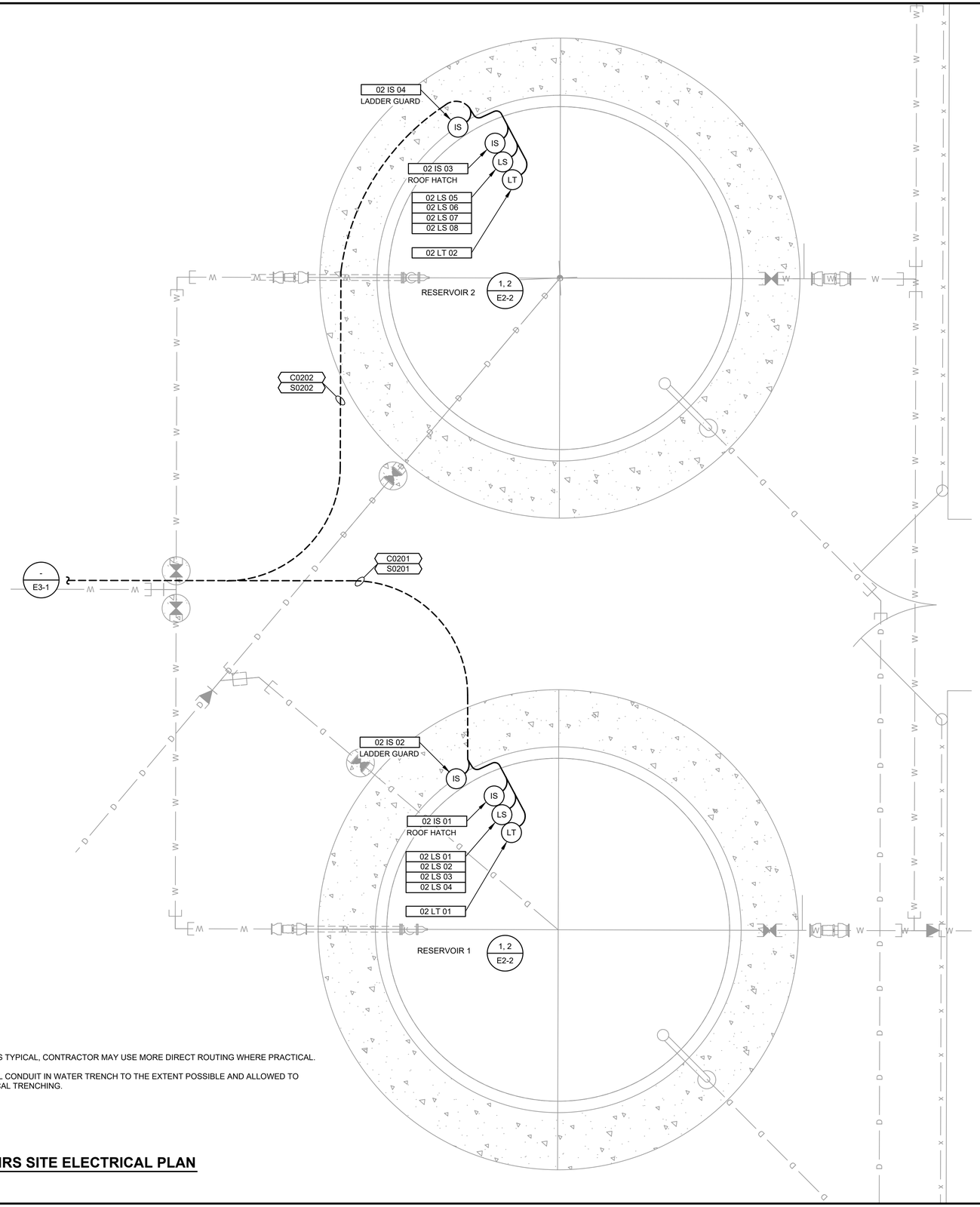

NOTES:

1. ROUTING SHOWN IS TYPICAL, CONTRACTOR MAY USE MORE DIRECT ROUTING WHERE PRACTICAL.
2. ROUTE ELECTRICAL CONDUIT IN WATER TRENCH TO THE EXTENT POSSIBLE AND ALLOWED TO MINIMIZE ELECTRICAL TRENCHING.

RESERVOIRS SITE ELECTRICAL PLAN

SCALE: 1" = 5'

Gray & Osborne, Inc.
CONSULTING ENGINEERS
2102 CARRIAGE DRIVE SW,
BUILDING I
OLYMPIA, WA 98502
(360) 292-7481

DAVID ALAN CALKINS
STATE OF WASHINGTON
43249
REGISTERED
PROFESSIONAL ENGINEER
4/4/2025

MASON COUNTY PUD

MASON COUNTY PUD NO. 1
MANZANITA RESERVOIR AND BOOSTER PUMP STATION
1681 E McREAVY RD
UNION, WA

No.	DATE	REVISION

ISSUED FOR:	BID SET
ISSUE DATE:	APRIL 2025
APPROVED BY:	DAC
CHECKED BY:	JRN
DRAWN BY:	DCK
DESIGNER:	DAC
G & O JOB NO.:	22260.00
FILE:	E2_SP.DWG

0 1" 2"
TWO INCHES AT FULL SCALE.
IF NOT, SCALE ACCORDINGLY

ELECTRICAL

SCHEDULE A
AREA 02 RESERVOIRS SITE ELECTRICAL PLAN

DRAWING: **E2-1** OF: **2**

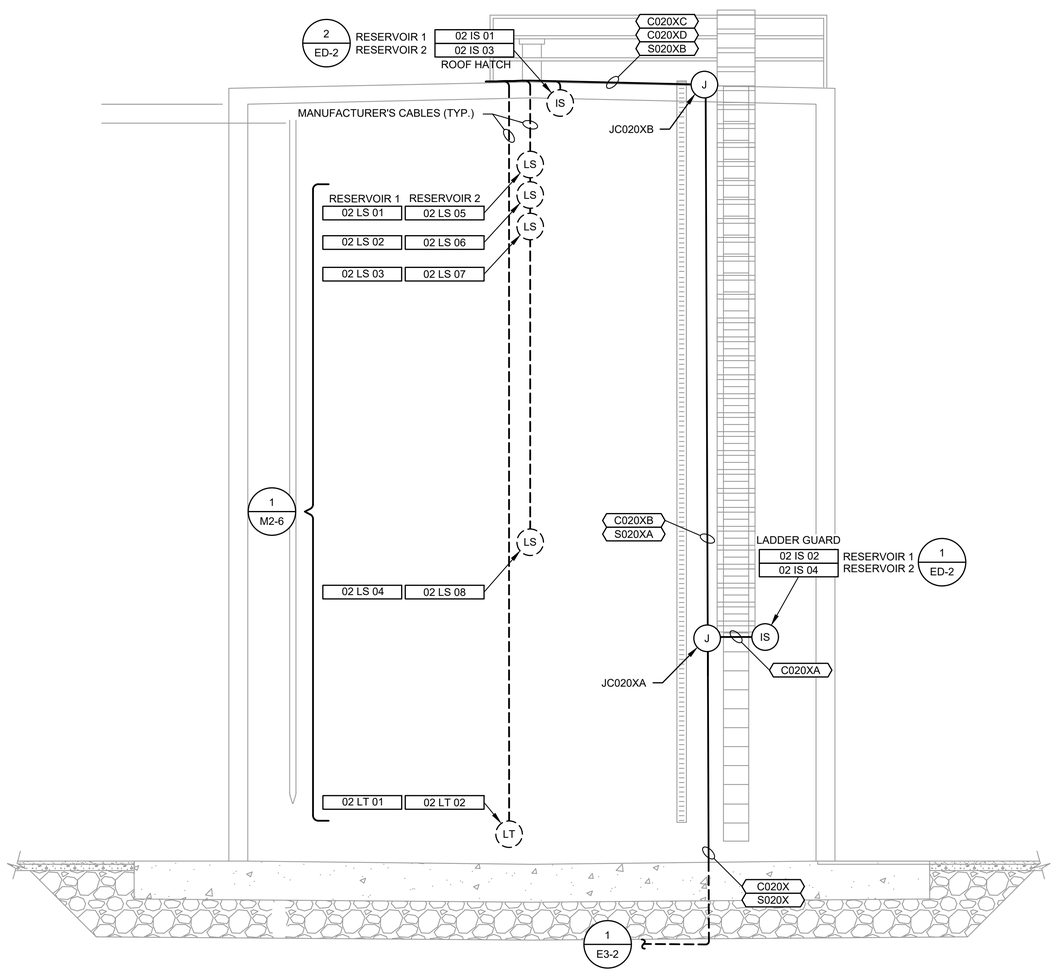

NOTES:

1. FOR CLARITY, NOT ALL ITEMS SHOWN IN EXACT LOCATION.
2. FOR CONDUITS AND J-BOXES X = 1 FOR RESERVOIR 1, X = 2 FOR RESERVOIR 2.
3. SUPPORT CONDUITS PER 3 / ED-2
4. REFERENCE M-SHEETS FOR MOUNTING DETAIL.

1 / - RESERVOIR 1 AND 2 ELECTRICAL ELEVATION

SCALE: 1/4" = 1'-0"

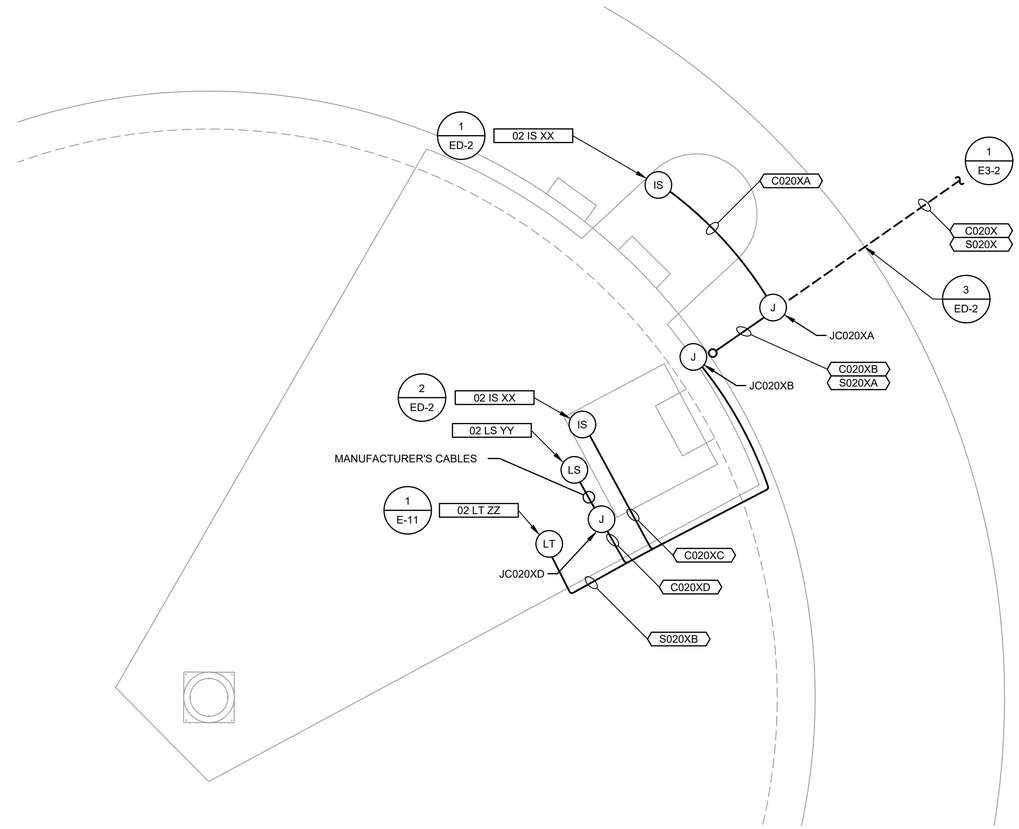

NOTES:

1. NOT ALL J-BOXES ASSOCIATED WITH TRANSITIONS FROM MANUFACTURER'S CABLES TO FIELD WIRING ARE NOT SHOWN HERE. REFERENCE DETAIL 1 THIS SHEET. SPLICING SHALL BE ALLOWED IN THE J-BOXES.
2. FOR INTRUSION SWITCHES [02 IS XX]
   XX = 01 (ROOF HATCH, RESERVOIR 1); XX = 03 (ROOF HATCH, RESERVOIR 2);
   XX = 02 (LADDER GUARD, RESERVOIR 1); XX = 04 (LADDER GUARD, RESERVOIR 2).
3. FOR LEVEL SWITCHES [02 LS YY]
   YY = 01, 02, 03, AND 04 FOR RESERVOIR 1;
   YY = 05, 06, 07, AND 08 FOR RESERVOIR 2.
4. FOR LEVEL TRANSDUCERS [02 LT ZZ]
   ZZ = 01 FOR RESERVOIR 1;
   ZZ = 02 FOR RESERVOIR 2.
5. FOR J-BOXES AND CONTROL AND INSTRUMENTATION CONDUITS
   X = 1 FOR RESERVOIR 1
   X = 2 FOR RESERVOIR 2.

2 / - RESERVOIR 1 AND 2 ROOF ENLARGED ELECTRICAL DETAIL

SCALE: 1/2" = 1'-0"

Gray & Osborne, Inc.
CONSULTING ENGINEERS
2102 CARRIAGE DRIVE SW,
BUILDING I
OLYMPIA, WA 98502
(360) 292-7481

DAVID ALAN CALKINS
STATE OF WASHINGTON
43240
REGISTERED PROFESSIONAL ENGINEER
4/4/2025

MASON COUNTY PUD

MASON COUNTY PUD NO. 1
MANZANITA RESERVOIR AND BOOSTER PUMP STATION
1681 E McREAVY RD
UNION, WA

No.	DATE	REVISION

ISSUED FOR:	BID SET
ISSUE DATE:	APRIL 2025
APPROVED BY:	DAC
CHECKED BY:	JRN
DRAWN BY:	DCK
DESIGNER:	DAC
G & O JOB NO.:	22260.00
FILE:	E2_RES.DWG

0 1" 2"
TWO INCHES AT FULL SCALE.
IF NOT, SCALE ACCORDINGLY

ELECTRICAL

SCHEDULE A
RESERVOIR 1 AND 2 ELECTRICAL PLAN AND ELEVATION

DRAWING: **E2-2** OF: **2**

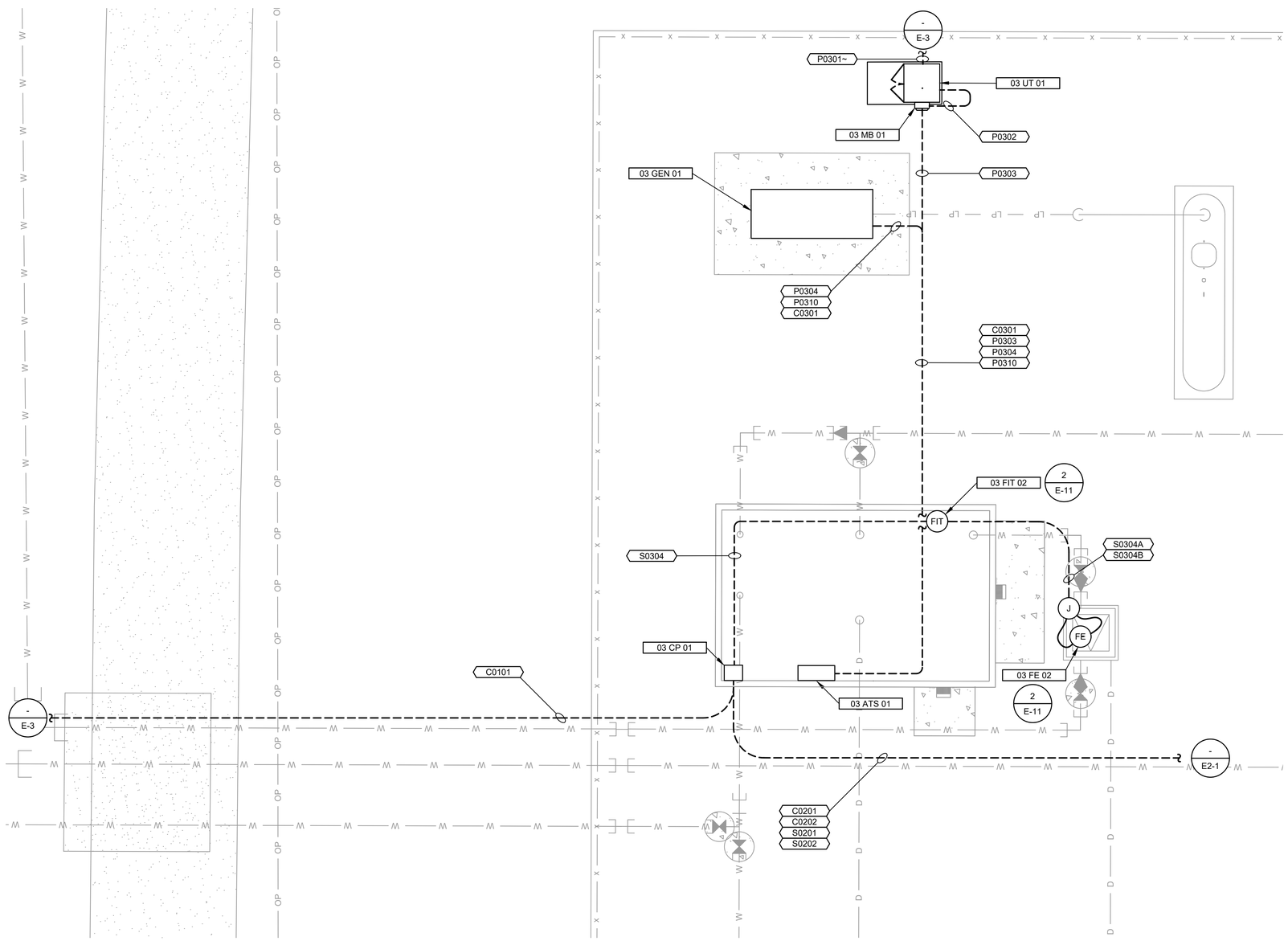

NOTES:

1. POWER UTILITY COMPANY IS MASON COUNTY PUD #3.
2. PROVIDE CONDUIT BETWEEN SUBSTATION [03 SUB 01] AND UTILITY TRANSFORMER [03 UT 01] PER ELECTRICAL POWER UTILITY COMPANY REQUIREMENTS.
3. ROUTE ELECTRICAL CONDUIT IN WATER TRENCH TO THE EXTENT POSSIBLE.

AREA 03 BOOSTER STATION SITE ELECTRICAL PLAN

SCALE: 1" = 5'

Gray & Osborne, Inc.
CONSULTING ENGINEERS
2102 CARRIAGE DRIVE SW,
BUILDING I
OLYMPIA, WA 98502
(360) 292-7481

DAVID ALAN CALKINS
STATE OF WASHINGTON
43249
REGISTERED PROFESSIONAL ENGINEER
4/4/2025

MASON COUNTY PUD

MASON COUNTY PUD NO. 1
MANZANITA RESERVOIR AND BOOSTER PUMP STATION
1681 E McREAVY RD
UNION, WA

No.	DATE	REVISION

ISSUED FOR:	BID SET
ISSUE DATE:	APRIL 2025
APPROVED BY:	DAC
CHECKED BY:	JRN
DRAWN BY:	DCK
DESIGNER:	DAC
G & O JOB NO.:	22260.00
FILE:	E3_SP.DWG

0 1" 2"
TWO INCHES AT FULL SCALE.
IF NOT, SCALE ACCORDINGLY

ELECTRICAL

SCHEDULE A
AREA 03 BOOSTER STATION SITE ELECTRICAL PLAN

DRAWING: **E3-1** OF: **4**

NOTES:

1. CONDUIT ROUTING SHOWN IS TYPICAL. CONTRACTOR MAY USE MORE DIRECT ROUTING.
2. ALL EXPOSED CONDUIT SHALL BE RGS, CONDUIT RUN IN ATTIC MAY BE PVC SCHEDULE 40.
3. EQUIPMENT IS SHOWN IN APPROXIMATELY CORRECT LOCATIONS. COORDINATE WITH PUD AND MECHANICAL CONTRACTORS FOR FINAL INSTALLATION LOCATIONS.
4. ROUTE ALL WIRING TO THE SKID PER SKID PUMP MANUACTURER'S REQUIREMENTS.
5. ROUTE PROVISIONS ADJACENT TO FUTURE SKID LOCATION. STUB-UP AND CAP.
6. STUB OUT SPARE CONDUITS [P0316~], [P0317~], AND [C0307~] 3 FT. FROM EXTERIOR OF WALL. CAP BELOW GRADE.

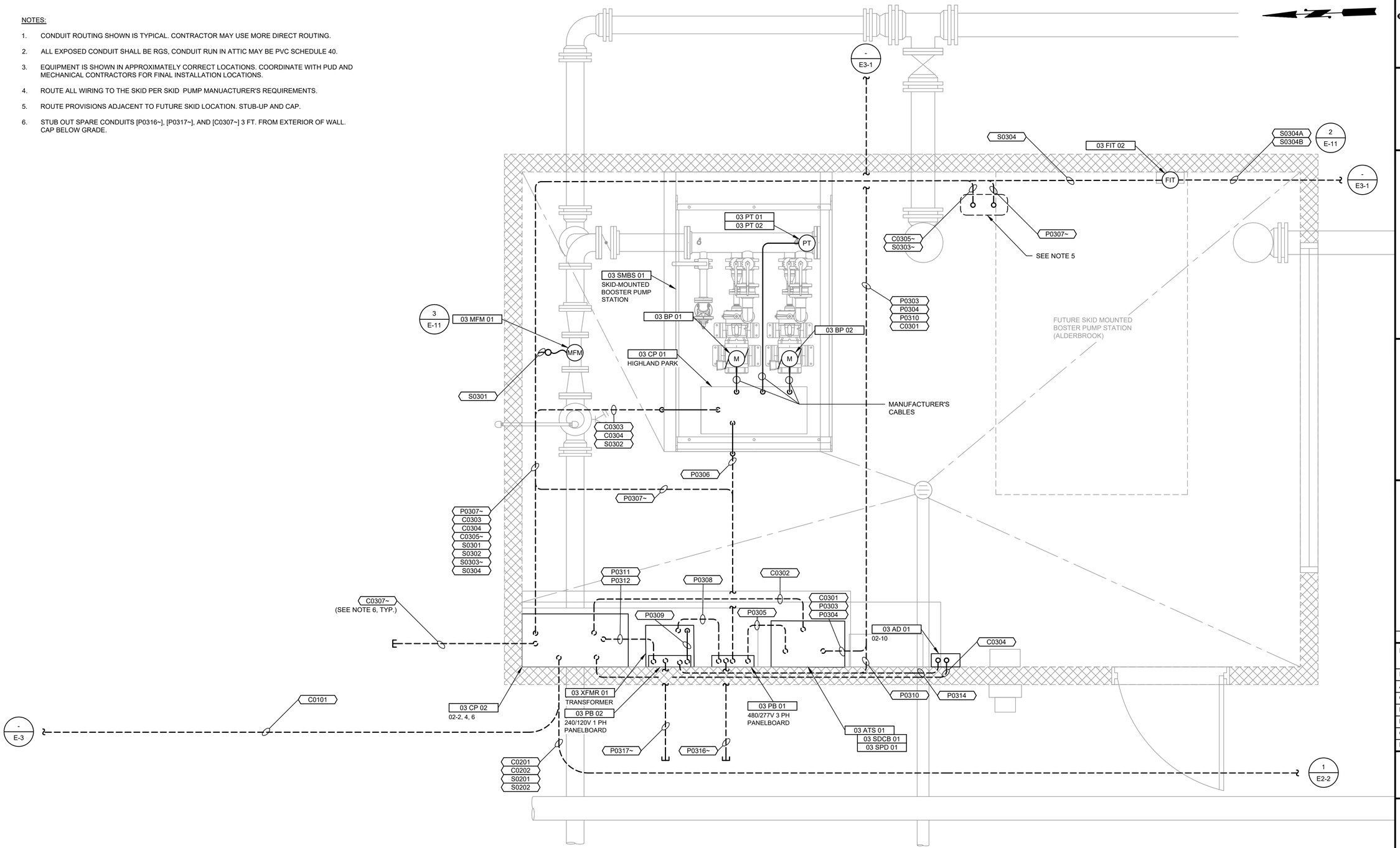

1 / - **BOOSTER BUILDING POWER, CONTROL AND INSTRUMENTATION PLAN**

SCALE: 3/4" = 1'-0"

Gray & Osborne, Inc.
CONSULTING ENGINEERS
2102 CARRIAGE DRIVE SW, BUILDING I
OLYMPIA, WA 98502
(360) 292-7481

DAVID ALAN CALKINS — STATE OF WASHINGTON — 43249 — REGISTERED PROFESSIONAL ENGINEER — 4/4/2025

MASON COUNTY PUD NO. 1
MANZANITA RESERVOIR AND BOOSTER PUMP STATION
1681 E McREAVY RD
UNION, WA

No.	DATE	REVISION

ISSUED FOR:	BID SET
ISSUE DATE:	APRIL 2025
APPROVED BY:	DAC
CHECKED BY:	JRN
DRAWN BY:	DCK
DESIGNER:	DAC
G & O JOB NO.:	22260.00
FILE:	E3_BLDG.DWG

0 1" 2"
TWO INCHES AT FULL SCALE. IF NOT, SCALE ACCORDINGLY

ELECTRICAL

SCHEDULE A
BOOSTER BUILDING POWER, CONTROL AND INSTRUMENTATION PLAN

DRAWING: **E3-2** OF: **4**

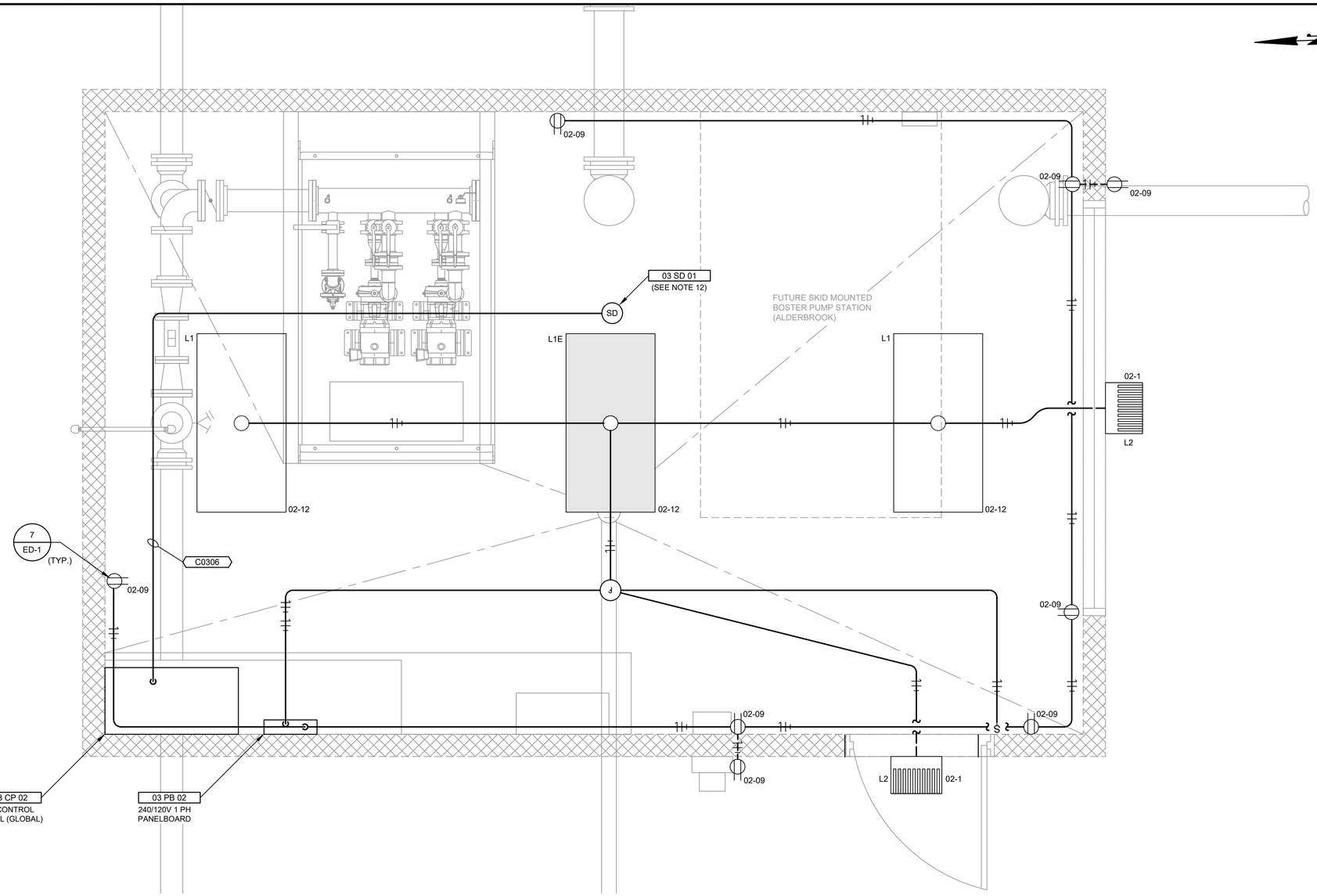

NOTES:

1. ALL EXPOSED CONDUITS SHALL BE RGS. CONDUIT IN ATTIC CAN BE SCHEDULE 40 PVC.
2. CONDUIT NUMBERS FOR CONVENIENCE RECEPTACLE AND LIGHTING CIRCUITS ARE ONLY APPLIED TO THE CONDUIT LEAVING THE POWER SOURCE. CONDUITS BETWEEN DEVICES ARE REQUIRED AND ARE NOT SHOWN IN THE CABLE AND CONDUIT SCHEDULE.
3. RECEPTACLES SHALL BE SURFACE MOUNTED TO THE INTERIOR AND EXTERIOR WALLS.
4. ALL INTERIOR CONVENIENCE RECEPTACLES SHALL BE 20A, WHITE, DUPLEX, IN CAST ALUMINUM BOXES WITH WEATHERPROOF COVERS. RECEPTACLES MOUNTED TO CONCRETE OR CMU WALLS SHALL BE SURFACE-MOUNTED.
5. WHERE A CONVENIENCE RECEPTACLE (INTERIOR OR EXTERIOR) IS NOT CONNECTED TO A GFCI CIRCUIT BREAKER, AT LEAST ONE RECEPTACLE WITH INTEGRAL GFCI PROTECTION SHALL BE INSTALLED PER CIRCUIT. REFERENCE PANELBOARD SCHEDULES.
6. ALL EXTERIOR RECEPTACLES SHALL BE 20A, WHITE, DUPLEX, IN CAST ALUMINUM BOXES WITH FULL IN SERVICE COVERS, AND SURFACE-MOUNTED.
7. ALL DEDICATED RECEPTACLES SHALL BE 20A, GRAY, SIMPLEX, NON-GFCI, IN CAST ALUMINUM BOXES WITH WEATHERPROOF COVERS. THEY SHALL BE LABELED FOLLOWING SPECIFICATION 16140.
8. ALL INTERIOR RECEPTACLES SHALL BE MOUNTED 42 INCHES ABOVE THE FLOOR. EXTERIOR RECEPTACLES SHALL BE MOUNTED AT 24 INCHES ABOVE GRADE AND ALIGNED WITH SMOOTH BLOCK.
9. THE ROUTING OF CONDUITS FOR LIGHTING AND RECEPTACLES ARE SHOWN FOR CLARITY ONLY. THE CONTRACTOR MAY USE MORE DIRECT ROUTING WHERE APPROPRIATE ROUTE CONDUITS IN THE ATTIC.
10. EXPOSED CONDUITS TO CONVENIENCE RECEPTACLES AND LIGHT SWITCHES MAY BE 1/2-INCH TRADE SIZE WHERE ALLOWED BY CODE.
11. THE POWER CONDUCTORS TO EMERGENCY LIGHTS SHALL NOT BE SWITCHED.
12. SMOKE DETECTORS SHALL BE 24 VDC POWERED WITH FORM C (DRY) CONTACTS. WIRE THE CONTACTS TO BE OPEN WHEN IN THE ALARM CONDITION, CLOSED UNDER NORMAL CONDITIONS.

LIGHTING SCHEDULE

MNEMONIC	TECHNOLOGY	APPLICATION	EM *	DESCRIPTION	MANUFACTURER		INPUT (VA)	VOLTAGE	COMMENTS
					NAME	SERIES NO.			
L1	LED	WET, CEILING/OVERHEAD	NO	24" X 48" TROFFER	LITHONIA	2FSL4 60L LP850	46	120 VAC, 1 PH	6000LM, 80% CRI, STATIC WHITE
L1E	LED	WET, CEILING/OVERHEAD	NO	24" X 48" TROFFER W/EMERGENCY BATTERY BACKUP	LITHONIA	2FSL4 60L LP850	46	120 VAC, 1 PH	6000LM, 80% CRI, STATIC WHITE, 10W EMERGENCY BATTERY BACKUP FOR 90 MIN.
WL1	LED	WET, WALL-MOUNT, BUILDING	NO	EXTERIOR BUILDING LIGHT.	LITHONIA	DSXW1 LED	44	120 VAC, 1 PH	3059 LUMENS, 4000 K, 10 LEDS (ONE ENGINE), 1000 MA DRIVE CURRENT, WITH PHOTOCELL AND VANDAL GUARD. 13-3/4" W X 10" D X 6-3/8" H.

1 / -

BOOSTER BUILDING LIGHTING AND RECEPTACLE PLAN

SCALE: 3/4" = 1'-0"

Gray & Osborne, Inc.
CONSULTING ENGINEERS
2102 CARRIAGE DRIVE SW,
BUILDING I
OLYMPIA, WA 98502
(360) 292-7481

DAVID ALAN CALKINS
STATE OF WASHINGTON
43240
REGISTERED PROFESSIONAL ENGINEER
4/4/2025

MASON COUNTY PUD

MASON COUNTY PUD NO. 1
MANZANITA RESERVOIR AND BOOSTER PUMP STATION
1681 E McREAVY RD
UNION, WA

No.	DATE	REVISION

ISSUED FOR:	BID SET
ISSUE DATE:	APRIL 2025
APPROVED BY:	DAC
CHECKED BY:	JRN
DRAWN BY:	DCK
DESIGNER:	DAC
G & O JOB NO.:	22260.00
FILE:	E3_BLDG.DWG

0 1" 2"
TWO INCHES AT FULL SCALE.
IF NOT, SCALE ACCORDINGLY

ELECTRICAL

SCHEDULE A
BOOSTER BUILDING LIGHTING AND RECEPTACLE PLAN

DRAWING: **E3-3** OF: **4**

NOTES:

1. THE CONTRACTOR MAY USE MORE DIRECT ROUTING WHERE APPROPRIATE FOLLOWING SPECIFICATION 16130.
2. INTRUSION SWITCH CIRCUITS SHALL BE 24 VDC, EACH WIRED SEPARATELY TO THE MAIN CONTROL PANEL.
3. INTRUSION SWITCHES SHALL BE WIRED SUCH THAT THEY ARE OPEN-CIRCUITED WHEN THE DOOR IS OPEN, CLOSED WHEN THE DOOR IS CLOSED.
4. HEATERS AND EXHAUST FANS SHALL INCLUDE INTEGRAL SAFETY DISCONNECT SWITCHES.

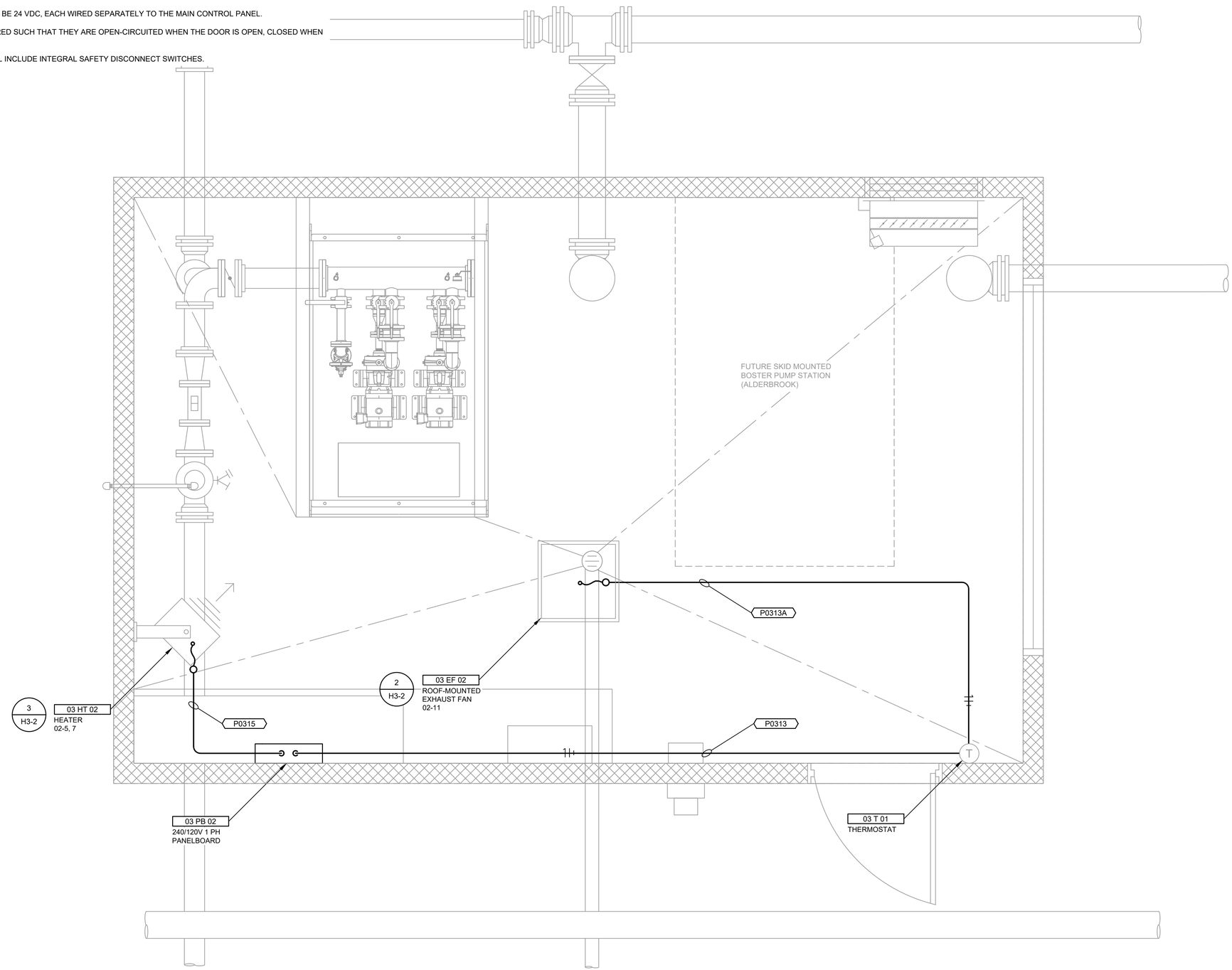

1 / - **BOOSTER BUILDING HVAC PLAN**

SCALE: 3/4" = 1'-0"

Gray & Osborne, Inc.
CONSULTING ENGINEERS
2102 CARRIAGE DRIVE SW,
BUILDING I
OLYMPIA, WA 98502
(360) 292-7481

DAVID ALAN CALKINS
STATE OF WASHINGTON
43249
REGISTERED
PROFESSIONAL ENGINEER
4/4/2025

MASON COUNTY PUD

MASON COUNTY PUD NO. 1
MANZANITA RESERVOIR AND BOOSTER PUMP STATION
1681 E McREAVY RD
UNION, WA

No.	DATE	REVISION

ISSUED FOR:	BID SET
ISSUE DATE:	APRIL 2025
APPROVED BY:	DAC
CHECKED BY:	JRN
DRAWN BY:	DCK
DESIGNER:	DAC
G & O JOB NO.:	22260.00
FILE:	E3_BLDG.DWG

0 1" 2"
TWO INCHES AT FULL SCALE.
IF NOT, SCALE ACCORDINGLY

ELECTRICAL

SCHEDULE A

BOOSTER BUILDING HVAC PLAN

DRAWING: **E3-4** OF: **4**